Installation & Maintenance Manual

R520
R620

R-Series Indoor Residential Fireplace

⚠ DANGER

Read and understand this manual. Improper installation, adjustment, alteration, service or maintenance can cause serious injury, property damage or even death. For assistance or additional information consult a qualified installer, service agency or the gas supplier.

⚠ WARNING

Do not store or use gasoline or any other flammable vapors and liquids in the vicinity of this or any other gas burning appliance. A fire or explosion my occur causing serious injury, property damage or even death.

⚠ CAUTION

Glass doors on gas fireplaces are **extremely hot** while the fireplace is on and remain hot even after the fireplace has been turned off. Safety screens are available and can reduce the risks of severe burns. Please keep children away from the fireplace at all times.

NOTICE

Installer: Leave this manual with the appliance. Do not remove.
Consumer: Retain this manual for maintenance and future reference. Do not Discard.

NOTICE

This fireplace is certified to ANSI Z21.50 / CSA 2.22 Vented Fireplace Standard a power assisted direct vent fireplace. This product uses outdoor air for combustion and exhausts combustion products outdoors.

DANGER

IF YOU SMELL GAS

- ⚠ Do not try to light any appliance.
- ⚠ Do not touch any electrical switch; do not use any phone in your building.
- ⚠ Immediately call your gas supplier from a neighbor's phone. Follow the gas supplier's instructions.
- ⚠ If you cannot reach your gas supplier, call the fire department.

NOTICE

You must read and understand this manual prior to installation, operation or troubleshooiting this applance. Please retain this owner's manual for future reference and maintenance.

Table of Contents

Safety Alert Key 3
Introduction 3
Congratulations on your purchase 3
Warranty and Installation Information: (See Appendix B) 3
Installation 4
Section A: Before You Begin 4
Important Message 4
Before you start 4
Pre-Installation Checklist 4
Introduction to R-Series Fireplace 5
Section 1: Product Dimensions ..... 6 - 7
R520 dimensions* 6
R620 dimensions* 7
Section 2: Framing ..... 8 - 12
Clearances 8
Raised Installation ..... 9 - 11
Installing the Fireplace 10
Installing the Back Frame 11
Recessed Installation 12
Section 3: Venting ..... 13 - 24
Notes for Planning Venting 13
Section 3 -1 Converting to Rear Vent 13
Section 3 -1- 1 Converting the Flue 13
Section 3-1-2 Converting Pressure Sensing Tub & Air Baffle 14
Section 3 -2 Installing a Roof Mounted Vent System ..... 15 - 16
Section 3 -2-1 Installing Roof Mounted Power Vent & Rough-in Frame .. .. 17 - 18
Section 3 -3 Installing a Wall Mounted Vent System ..... 19 - 20
Section 3 -3-1 Installing Roof Mounted Power Vent & Rough-in Frame .. .. 21 - 22
Section 3 -4 Venting Components 23
Section 3 -5 Heat Shields 24
Section 4: Wiring ..... 25 - 27
Installing the Fireplace Control Box 25
Installation of Electrical Supply 25
Installing the Remote Switch 26
Wiring Diagram 27
Conduit & Wiring Clearances 27
Section 5: Installing the Gas Line 28
Fuel Consumption 28
Pressure requirements: 28
Gas Connection 28
Section 6: Testing the System 29
Section 7: Finishing ..... 30 - 33
Installation Of Cement Board 30
Installing Gyproc/Drywall 30
Finishing Around the Fireplace 31
Mantels & Surrounds 31
Section 8: Removing & Installing the Door 32
Section 9: Installing the Firestones 33
Operation 34
Start-up Sequence 34
Maintenance 35
Appendix ..... 36 - 39
Appendix A: Power Vent Locations ..... 36 - 37
Appendix B: Warranty *38*
Appendix C: State of Massachusetts *39*

Safety Alert Key

⚠ DANGER

Indicates a hazardous situation which, if not avoided, WILL result in death or serious injury or property damage.

⚠ WARNING

Indicates a hazardous situation which, if not avoided, COULD result in death or serious injury or property damage.

⚠ CAUTION

Indicates a hazardous situation which, if not avoided, WILL result in minor or moderate injury.

NOTICE

Addresses practices that are important, but not related to personal injury

Introduction

Congratulations on your purchase of a **Montigo Fireplace**.

With over 30 years of experience, Montigo is committed to providing you with a gas fireplace that is not only a beautiful addition to your space, but that is also designed and manufactured to the highest safety, reliability and engineering standards.

We strongly encourage you to read and carefully follow the instructions laid out in this Installation, Operation and Maintenance Manual and retain it for your future reference. Pay special attention to all cautions, warnings, and notices throughout this manual intended to ensure your safety.

This manual covers installation, operation and maintenance. Lighting, operation and care of this fireplace can be easily performed by the homeowner. All installation and service work should be performed by a qualified or licensed installer, plumber or gas fitter as certified by the state, province, region or governing body where the fireplace is being installed.

This installation, operation and maintenance manual is applicable to the models described below. Refer to your rating plate to verify included options.

MODEL	Natural Gas	Liquid Propane	Gas Rating (BTU hr)	Linear Burner w/ Glass Accessories	Honeywell Hot Surface Ignition
R520N-I	X		80,000	X	X
R520L-I		X	65,000	X	X
R620N-I	X		100,000	X	X
R620L-I		X	80,000	X	X

Warranty and Installation Information: (See Appendix B)

The Montigo warranty will be voided by, and Montigo disclaims any responsibility for, the following actions:

► Modification of the fireplace and/or components including Direct-Vent assembly or glass doors.

► Use of any component part not manufactured or approved by Montigo in combination with this Montigo fireplace system.

► Installation other than as instructed in this manual.

Consult your local Gas Inspection Branch on installation requirements for factory-built gas fireplaces. Installation & repairs should be done by a qualified contractor.

⚠ WARNING

Hot glass will cause burns. **Do not touch** glass until unit is cooled. **Never** allow children to touch glass.

Installation

Section A: Before You Begin

IMPORTANT MESSAGE: SAVE THESE INSTRUCTIONS

The **R520* & R620*** Power Vent fireplaces must be installed in accordance with these Instructions. Carefully read all the instructions in this manual first. Consult the Local Gas Branch to determine the need for a permit prior to starting the installation. It is the responsibility of the installer to ensure this fireplace is installed in compliance with the manufacturers instructions and all applicable codes.

BEFORE YOU START:

NOTICE

Installation and repairs should be done by an authorized gas fireplace service technician. The appliance should be inspected before use and at least annually by a professional. More frequesnt cleaning may be required due to exessive lint from carpeting, bedding material, etc. It is imperative that control compartments, burners and circulating air passageways of the fireplace are kept clean.

⚠ CAUTION

Due to high operating temperatures, this appliance should be located out of traffic & away from furniture and draperies.
Children and adults should be alerted to the hazards of the high surface temperature, which could cause burns or clothing ignition.
Young children should be carefully supervised when they are in the same room as the appliance.
Clothing or other flammable materials should not be placed on or near the appliance.

⚠ DANGER

When this appliance is installed directly on any combustible material other than wood flooring, it must be installed on a metal or wood panel extending the full width and depth of the appliance or a fire will occur causing serious injury, property damage or even death.

Installation Checklist

- Determine the desired install location of your fireplace.
- See Section 1, Dimensions and refer to the Framing Section 2 for details.
- Select your type and location of your Power Vent run: Roof Mounted (EPVRR) or Wall Mounted (EPVRW).
- Your termination location should be selected to provide the most efficient vent run.
- Lay out the Vent run; calculating the required elbows and straight runs of 5"/10" flex or rigid pipe.
- Refer to the Section 3, "Venting" for details.
- Montigo supplies 20' of low voltage wire, which can be spliced to a maximum of 100' with wire of equal quality. This wire CANNOT run in conduit with any other wire.
- Refer to Section 4, for Wiring Details.
- The gas connection is located on the bottom right side (pilot burner side) of the fireplace.
- Refer to local codes and guidelines for installation requirements.
- Refer to Section 5, "Installing the Gas Line" for details.
- Installation and repairs should be done by a qualified contractor and must conform to:

• **Installations in Canada** must conform to the local codes or in the absence of local codes to the current version of Natural Gas and Propane Installation Code, CSA B149. Electrical Installations must conform to the local codes or, in the absence of local codes, to the current version of Canadian Electrical Code, CSA C22.1.1

• **Installations in the USA** must conform to the local codes or in the absence of local codes to the current version of National Fuel Gas Code, ANSI Z223.1/NFPA 54. Electrical Installations must conform to the local codes or, in the absence of local codes, to the current version of the National Electrical Code, ANSI/NFPA 70. See **Appendix C** for installation within the State of Massachusetts.

⚠ CAUTION

Young children should be carefully supervised when they are in the same room as the applicance. Toddlers, young children and others may be susceptible to accidental contact burns. A physical barrier is recommended if there are at risk individuals in the house. To restrict access to a fireplace or stove, install an adjustable safety gate to keep toddles, young children and other at risk individuals out of the room and away from hot surfaces.

Installation

Introduction to the R-Series Fireplace:

The complete system will require a firebox, a power vent module, an electrical control panel, and a vent system. The appropriate vent system will connect the firebox to the power vent module and will be placed in a vertical or horizontal location. **The R-Series fireplace is not a heat efficient fireplace and should not be used with a thermostat to heat your home. This product is a fire feature and should only be used to enhance the ambiance of the room.** Please review the Installation Checklist on **Page 4** for general information on preparing for a successful installation of your fireplace.

Install location:

The R-Series fireplace may be installed in any location that maintains proper clearances to air conditioning ducts, electrical wiring, and plumbing. Safety, as well as efficiency of operation, must be considered when selecting the fireplace location. Try to select a location that does not interfere with room traffic, has adequate ventilation, and offers an accessible pathway for Power Vent installation.

Basic Operation:

The gas control components of this fireplace are located in the bottom of the firebox below the burner system. All models are supplied with a Honeywell smart valve gas control and do **NOT** have a variable flame control. There are two air switches that control the gas control system, located in the bottom of the firebox. These gas valves and pressure switches communicate with the electrical control panel through a ten conductor cable supplied with the fireplace.

To operate the fireplace, Montigo supplies 20' of low voltage wire from the electrical control panel. Connect the two wire harnesses to a standard single pole ON/OFF switch to the location of your choice. You may extend these wires up to 100' in length with a wire of equal quality.

CAUTION: Do NOT connect power to these wires.

WARNING

The **R520* & R620*** are classified under power vented fireplace systems.
Under no circumstances can thse models be installed without a Power Vent Module.

For Horizontal Vent Installations, use 5”/10” Power Vent Motor EPVRW with rough-in kit EPVRWF.

For Vertical Vent Installations, use 5”/10” Power Vent Motor EPVRR with rough-in kit EPVRRF.

Installation

Section 1: Product Dimensions

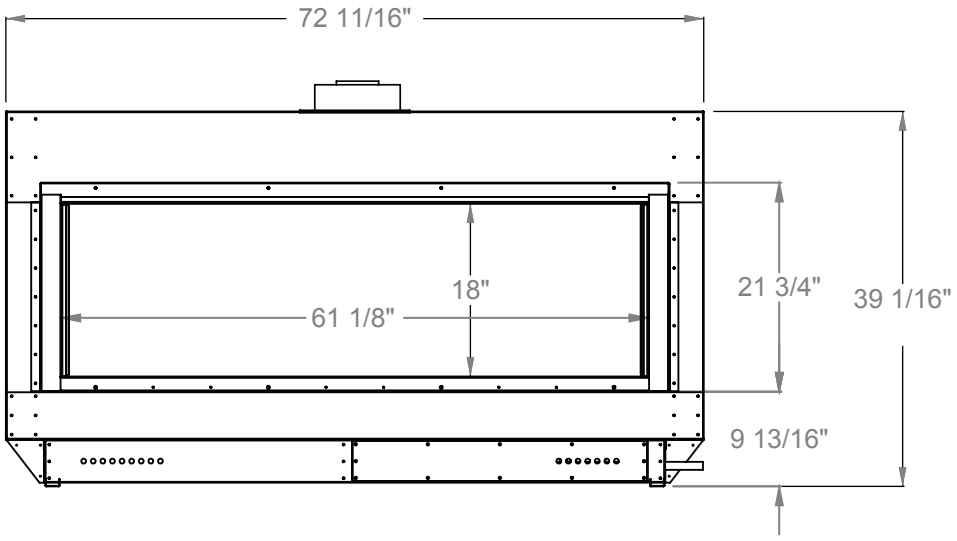

Front View

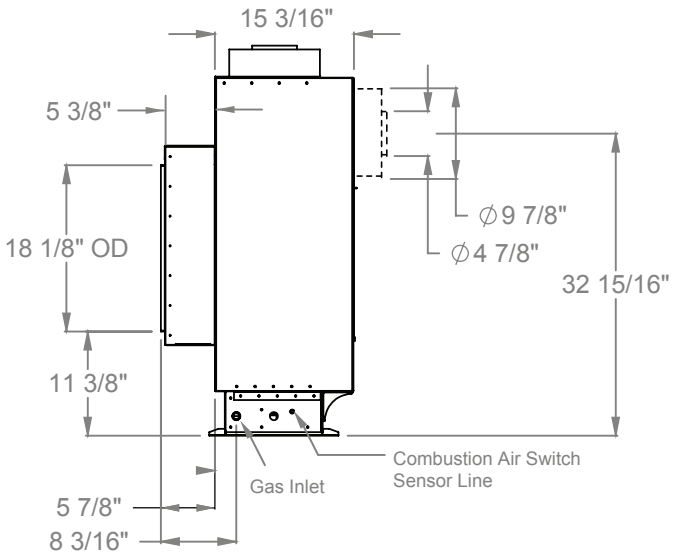

Side View

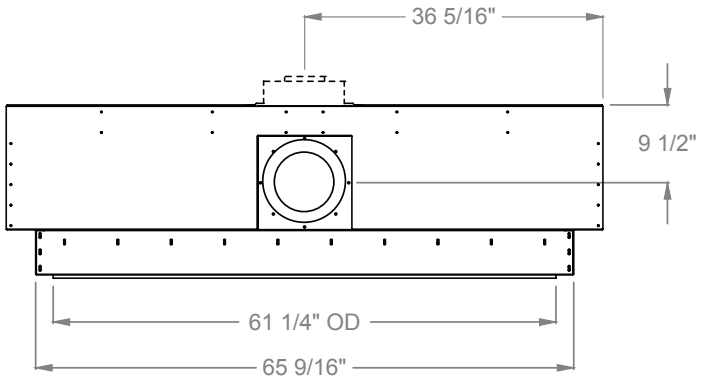

Top View

Figure 1. *R520* Fireplace dimensions (Tolerance ± ⅛").*

Installation

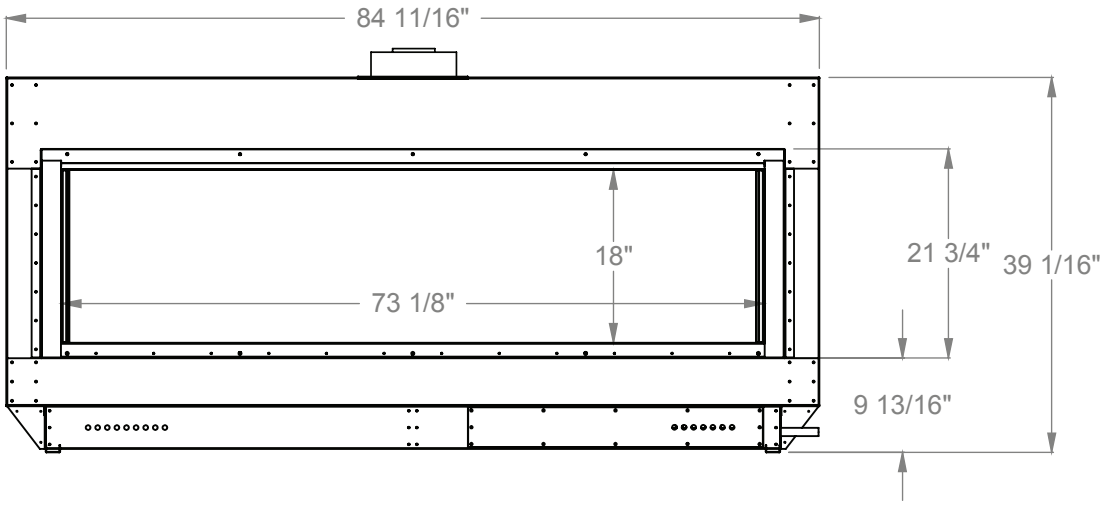

Front View

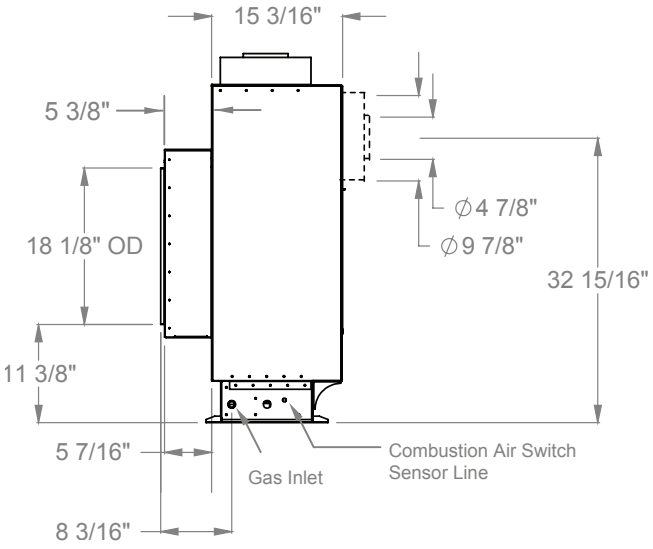

Side View

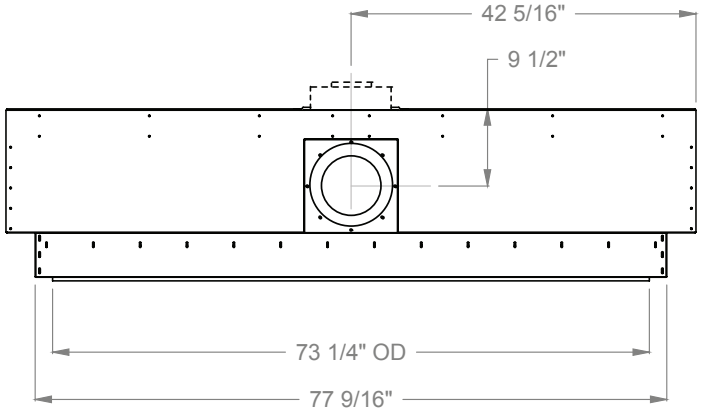

Top View

Figure 1a. *R620* Fireplace dimensions (Tolerance ± ⅛").*

Installation

Section 2: Framing

Clearances:

To ensure the fireplace operates safely, all models must maintain the following clearances:

MODEL	Top - Rear Vent †	Top - Top Vent †	Rear - Top Vent	Rear - Rear Vent	Sides	Floor	Mantel
R520*	24	24	2	6	3	0	6
R620*	24	24	2	6	3	0	6

† **Note:** Clearance from top of fireplace to a combustible ceiling within the fireplace enclosure.

Unprotected combustible walls which are perpendicular to the fireplace opening must maintain 6" clearance, see **figure 20**.

Frame in the enclosure for the unit with framing materials, see **Figure 3.**

NOTE: When constructing the framed opening, please ensure there is access to install the gas line when the unit is installed. See ***Figure 16.***

Venting Clearance Requirements:

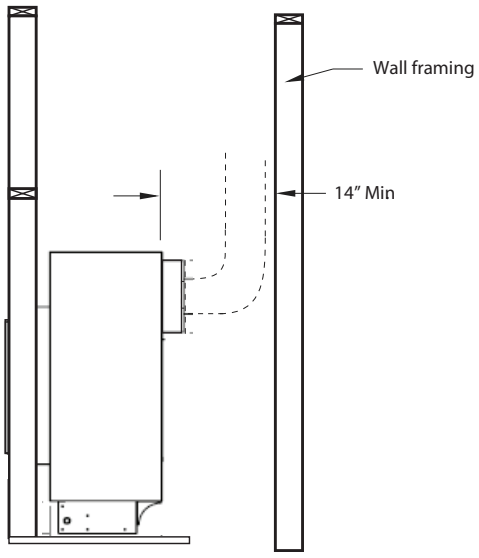

Figure 2. *Clearances for rear vented installation with elbow.*

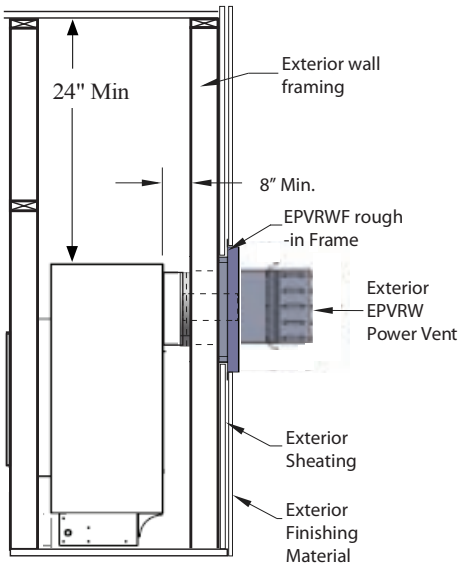

Figure 2a. *Clearances for straight rear vented installation.*

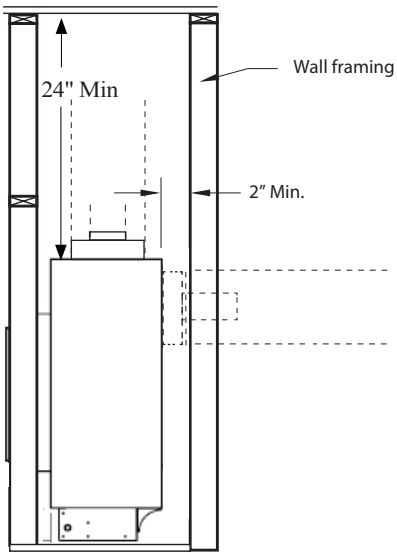

Figure 2b. *Clearances for top or rear vented installation, straight vent run or with elbow(s).*

⚠ WARNING

When this appliance is installed directly on ANY combustible materials other than wood flooring (carpet, vinyl, etc), it must be installed on an equivalent wood or metal panel. This material must extend the full width and depth of the appliance.

Installation

Raised Installation:

Determine the height of the platform based on where you want the bottom edge of the glass to be, see **figure 1 or 1a** for unit dimensions. Maintain minimum ceiling height shown in table. Build fireplace frame as shown in **figure 3**.

Maximum Platform Height	Minimum Required Ceiling Height
24"	86"
48"	110"

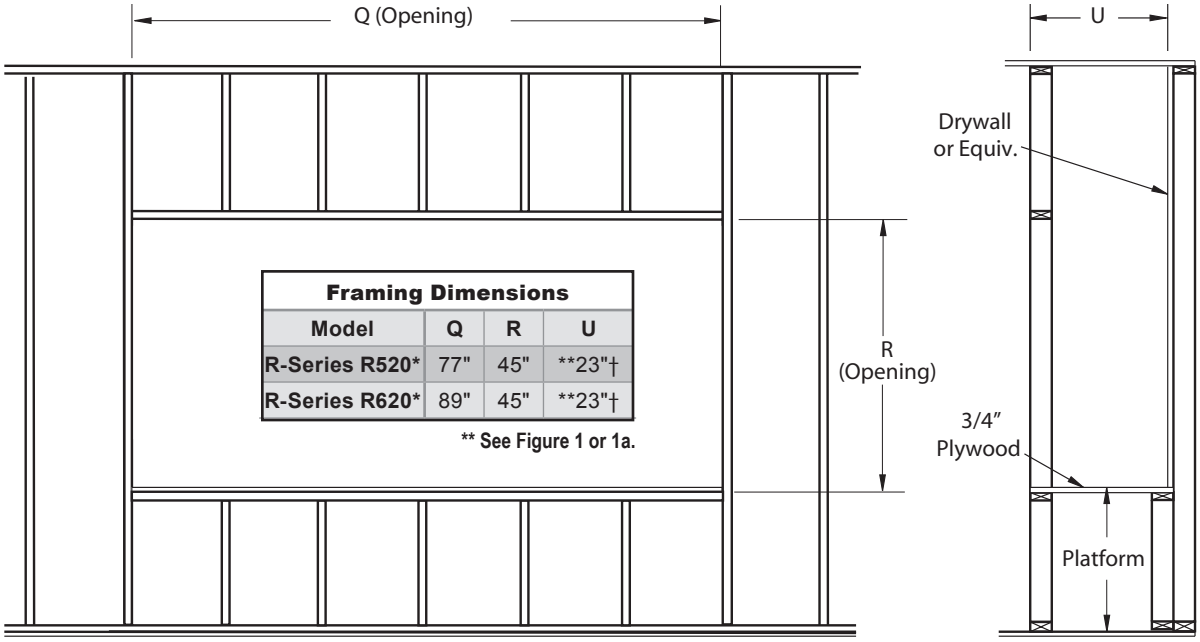

Figure 3. *Fireplace installation, (Rough Frame-In dimensions).*
† U is 29" for straight out the back vent run installations.

Installation

Installing the Fireplace:

Place the Fireplace on the platform and install the Vent pipe, and Power Vent module. Next, connect the Gas line, and provide a gas service shut-off valve; according to local gas codes. Before fastening in place Line up the front face of the fireplace (top and bottom), ***Figure 3***. then secure in place with 1/4"bolts and washers to the platform.

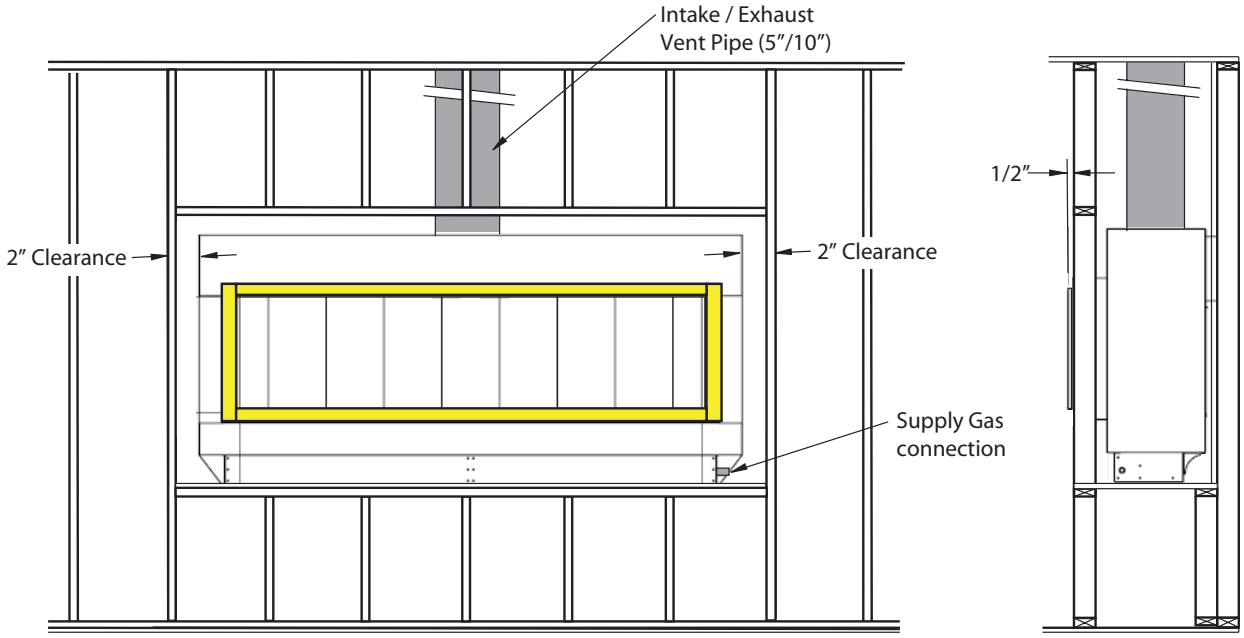

Figure 4. Fireplace installation, *(Inlet Gas & Power Vent)*.

Installation

Back framing the Fireplace

NOTE: Maintain a 1" clearance around the throat (projection at the front of the fireplace that holds the glass door) when installing 2x4s for back framing.

Step 1). Cut and install one 2x4 to fit horizontally under the fireplace throat.

Step 2). Cut and install required quantity of short filler 2x4's to fit vertically under the horizontal piece.

Step 3). Cut and install four vertical 2x4's. Place 2 on each side of the fireplace throat.

Step 4). Install supplied steel header 1" above the throat. Attach steel header to vertical 2x4's as shown in **figure 5**.

Step 5). Cut and install one horizontal 2x4 below the top frame.

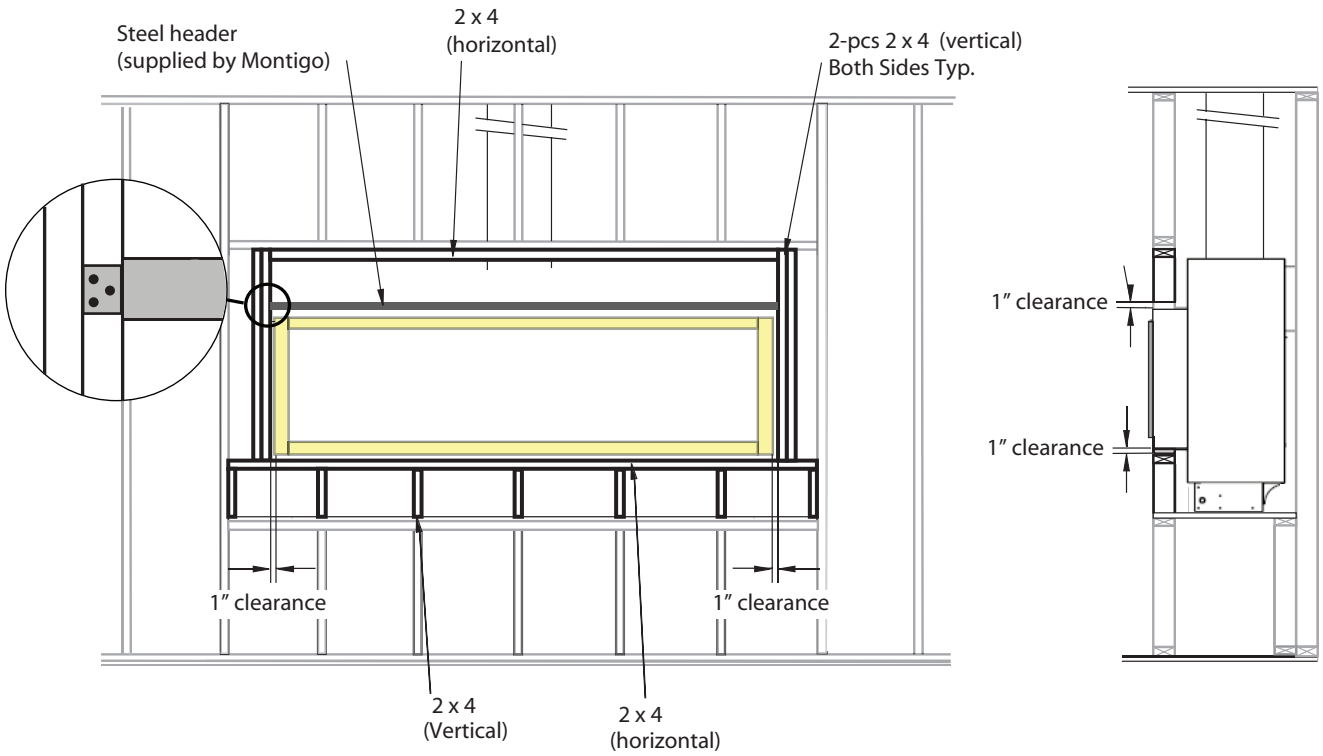

Figure 5. Completed back frame Fireplace installation

Model	Supplied Steel Header Measurements
R520*	70 1/2" x 3"
R620*	82 3/4" x 3"

Installation

Recessed Installation:

This fireplace can be recessed into the floor to get the viewing area as low as possible.

Maintain a minimum of 6" clearance from the bottom of glass to completed floor. Minimum clearance can be reduced to 3" for uncarpeted flooring. Discolouration may occur due to high temperatures.

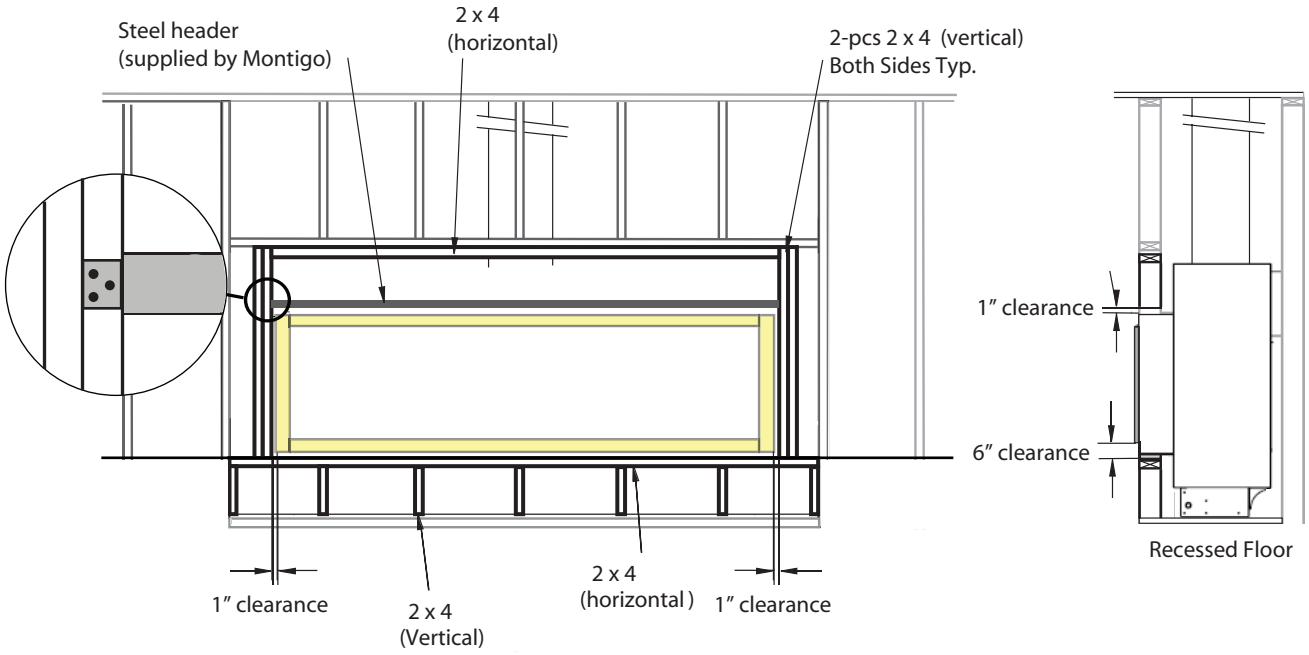

Figure 6. Recessed Fireplace installation

Installation

Section 3: Venting

Montigo supplies a variety of power venting options. The location of the power vent should be selected and laid out to provide the most efficient possible run to an external wall or through the roof.

Notes For Planning Venting:

- R-Series fireplaces are Power Vent Designated.
- Venting originates from the top or rear of the unit.
- Venting can terminate through the roof or exterior wall.
- For a detailed diagram of allowed termination locations, see **Appendix A**.
- Once the termination location has been established refer to the appropriate section for installation details.
- All fireplaces are shipped Top Vent from the factory.
- Ensure there is a minimum vent run of **2'** of straight vent pipe before the power vent, except for straight rear vented installs.
- Follow the chart on page 15 or page 19 for maximum ventrun and maximum elbows.

Section 3-1: Converting to Rear Vent

R-Series units are shipped for Top Vent installations. Follow the instructions to convert unit for Rear Vent installation.

Section 3-1-1: Converting the Flue

1. Remove the Rear flue cover with gasket (5" and 10") on the flue outlet, as shown in ***Figure 7.*** **ENSURE YOU DO NOT DAMAGE THE FIBRE GASKETS.**

2. Remove the Top flue collar (5" and 10") on the flue outlet, as shown in ***Figure 7.*** **ENSURE YOU DO NOT DAMAGE THE FIBRE GASKETS.**

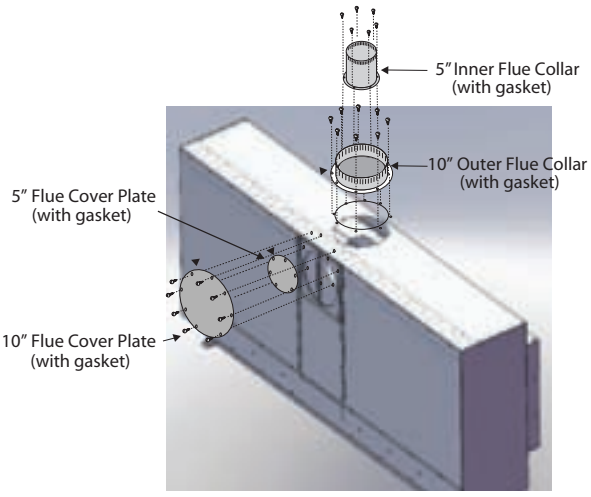

Figure 7. *Flue cover and collar removal, Top Vented fireplace*

3. Install the removed Rear flue cover (5" and 10") to the Top Vent outlet. Fasten the cover with included hardware, as shown in ***Figure 7a***.

4. Install the collars (5" and 10") to the rear vent outlet using the included hardware, as shown in ***Figure 7a***.

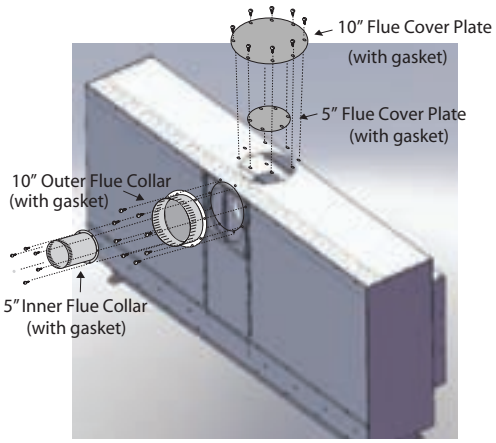

Figure 7a. *Flue cover and collar installation, Rear Vented fireplace*

5. Proceed to Section 3-1-2: Converting Pressure Sensing Tube and Air Baffle.

Installation

Section 3-1-2: Converting the Pressure Sensing Tube and Air Baffle

When the **R520*/R620*** is converted from Top Vent to Rear Vent, the pressure sensing tube must be removed and replaced with supplied Rear Vent pressure sensing tube and air baffle must be relocated as described below.

Figure 8. *Factory installed Top Vent Pressure Sensing Tube*

Figure 8a. *Supplied Rear Vent Pressure Sensing Tube*

1. Remove two screws from the air baffle installed over the Top Vent from inside the firebox. Once air baffle is removed, replace the two screws back into the same position.

Note: Not all models are equipped with an air baffle. Only convert if available.

2. Remove Top Vent pressure sensing tube but loosening the compression nut with a 1/2" wrench.

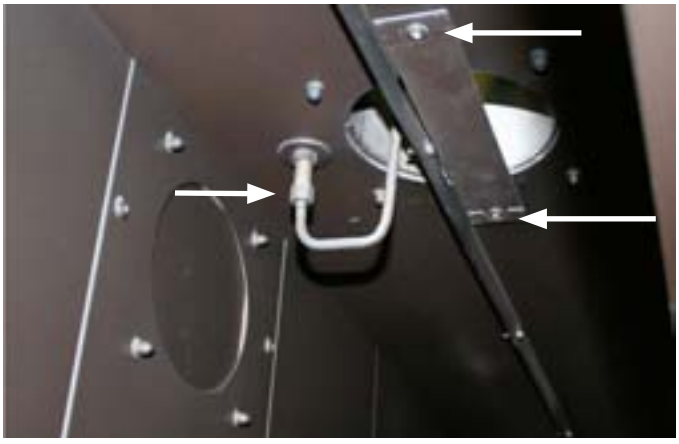

Figure 9. *Removal of Top Vent air baffle and pressure sensing tube.*

3. Position the supplied Rear Vent pressure sensing tube as shown in **Figure 9a**. Hand tighten the compression nut by hand and then a half-turn with a wrench.
   Do not over tighten.

4. Install air baffle over Rear Vent from inside the firebox with two screws provided at the Rear Vent.

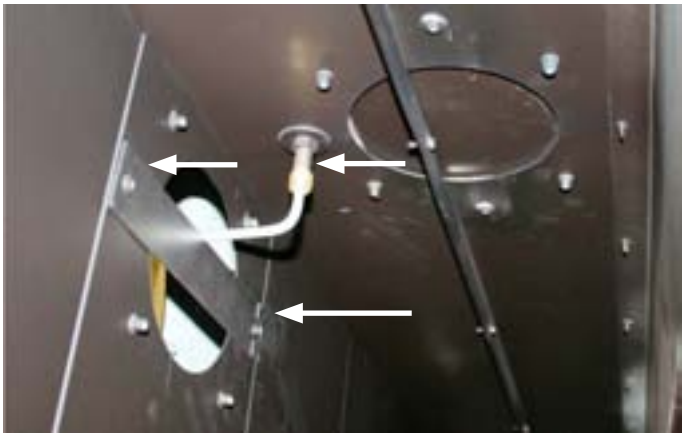

Figure 9a. *Removal of Top Vent air baffle and pressure sensing tube.*

Installation

Section 3-2: Installing a Roof Mounted Vent System

This section applies to installations where the most efficient vent run is through the roof. Refer to **Appendix A - Power Vent locations**, to ensure the planned Power vent location is acceptable. Refer to the table below for vent run requirements.

Vent Configuration	Refer to Figure	Maximum Vent Run (Horizontal + Vertical)	Maximum Elbows†
Straight Vertical Top or Rear Vent	Figure 10	100 Feet	Six 90° or equivalent †
Multi-Elbow Top or Rear Vent	Figure 10a		
Multi-Elbow with 6' downward vent run Top or Rear Vent	Figure 10b	70 Feet**	

† One 90° elbow is equal to two 45° elbows.
** For every additional 1 foot downward vent run subtract 10 feet from the maximum vent run.

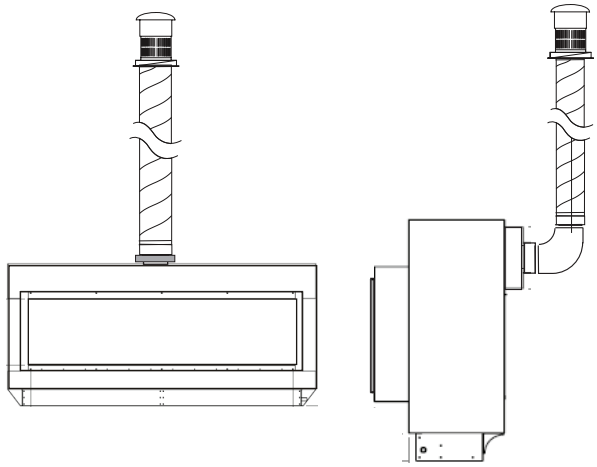

Figure 10. *Straight Vertical, Top or Rear Vent, Roof mounted power vent.*

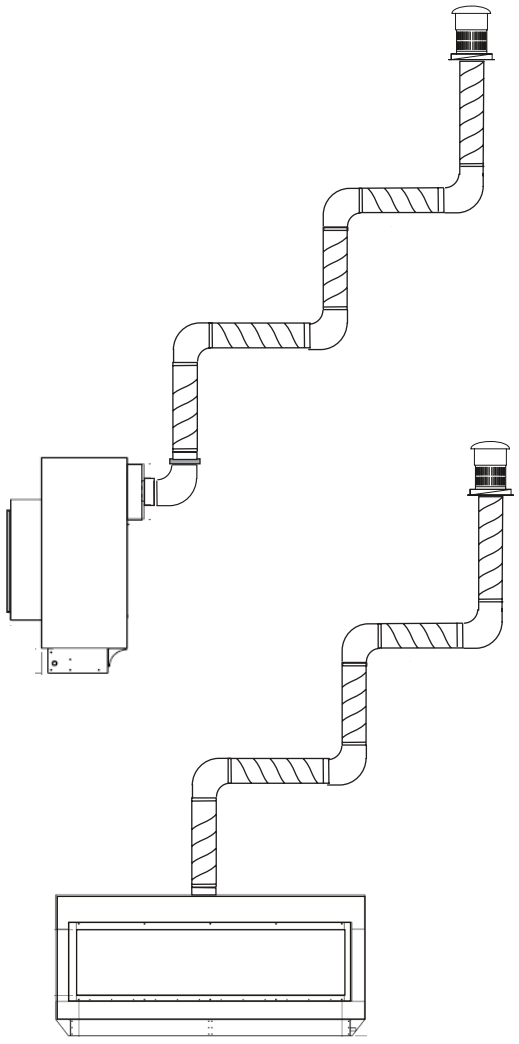

Figure 10a. *Multi-Elbow, Top or Rear Vent, Roof mounted power vent.*

Installation

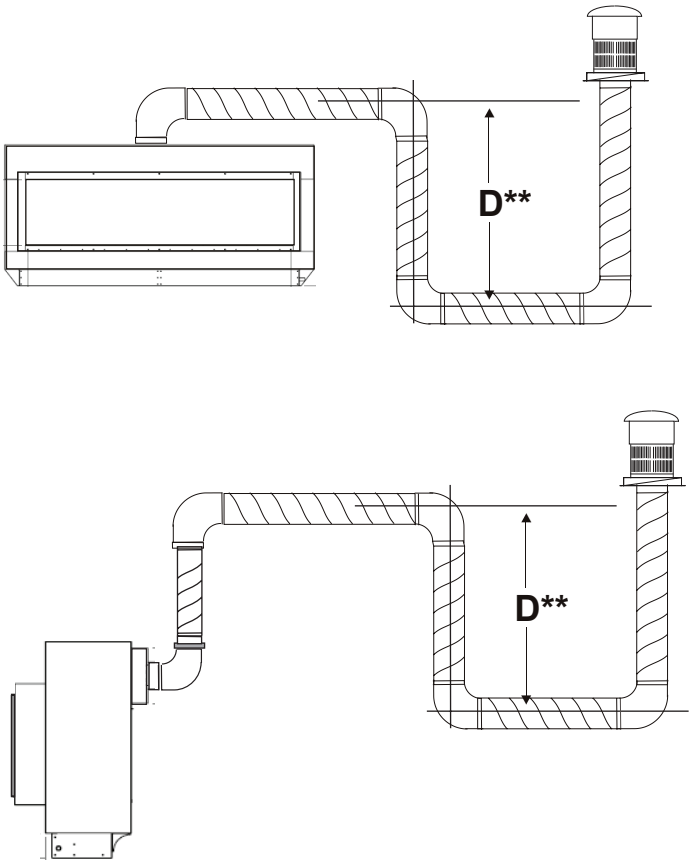

Figure 10b. *Multi-Elbow with downward vent run, Top or Rear Vent, Roof mounted power vent.*

Installation

Section 3-2-1: Installing Roof Mounted Power Vent (EPVRR) and Rough-in Frame (EPVRRF)

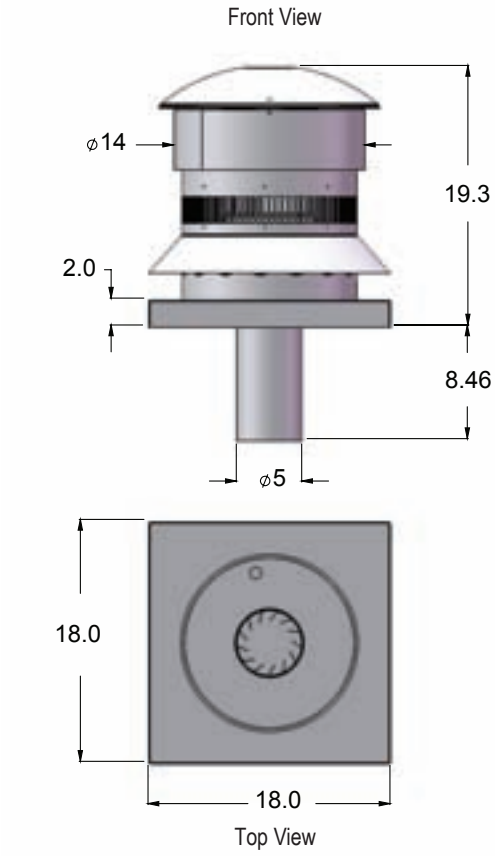

Step 1: Construct a chase box around the vent penetration with interior dimensions of 14 1/2" x 14 1/2" x 18" minimum in height, see ***Figure 11.***

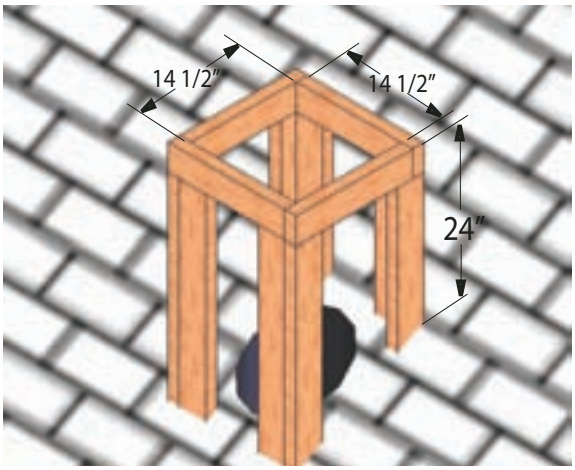

Figure 11. *Chase box dimensions.*

Step 2: Install the Vent pipe female end up 2" to 3" maximum from the top of the chase box. Install the electrical harness (EPVH-10-100) that will communicate with the Power Vent module, see ***Figure 11a.***

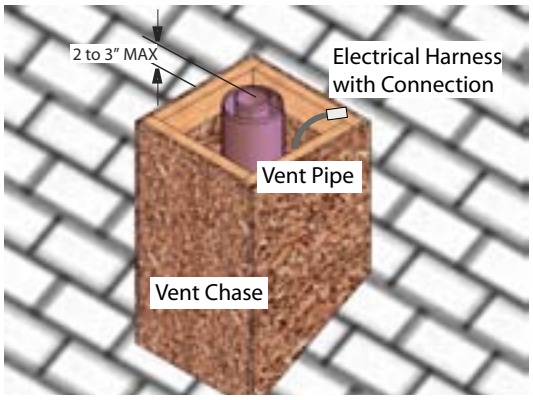

Figure 11a.

Step 3: Install the Power Vent Rough-in Kit (EPVRRF). Pull wire harness through the supplied hole in the bottom corner of the rough-in box and snap into the slot provided, see **Figure 11b** inset.

Installation

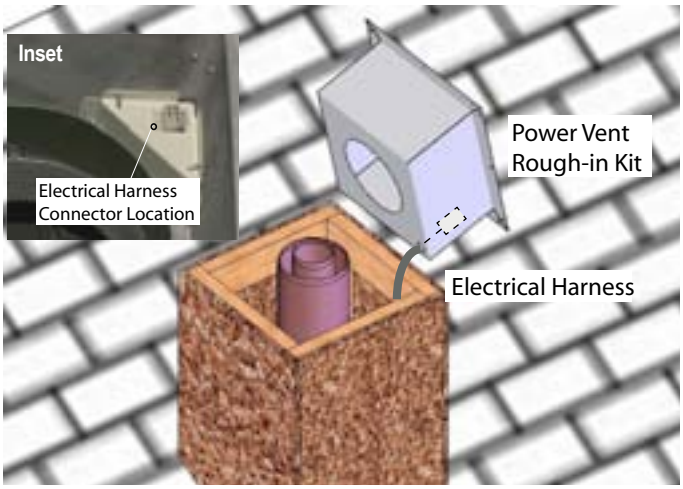

Figure 11b. *Installing the Rough-in Kit.*

Step 4: Install screws around perimeter of Rough-in Kit. Drill holes supplied for ease of installation, see ***Figure 11c.***

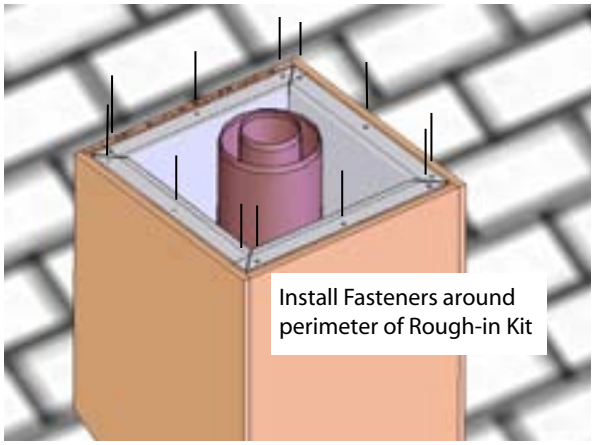

Figure 11c. *Fasten Rough-in Kit to framing*

Step 5: Install the Power Vent Roof top stainless steel cover over the installed Rough-in Kit, see ***Figure 11d.*** The Electrical connector is located in the corner, see ***Figure 11e***.

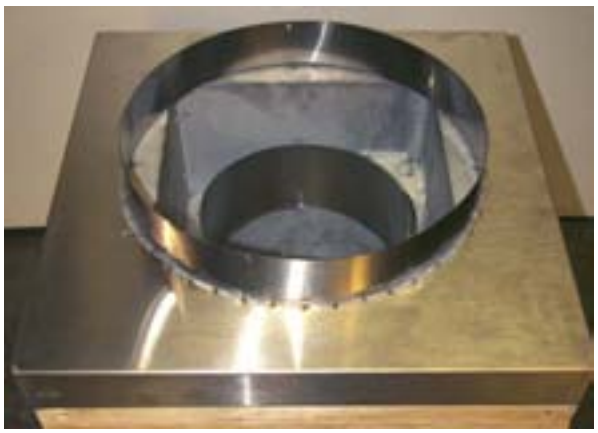

Figure 11d. Installed stainless steel cover.

Step 6: Install the Power Vent module power harness. Hold the Power Vent in close proximity to the assembled chase. With stainless steel cover attached, plug in the power harness. Note the direction and orientation of the plug socket, see ***Figure 11e.***

Figure 11e. Installed power harness.

Step 7: Install the Power Vent module. Place the Power Vent module over the stainless steel cover flange and vent pipe. Align the Power Vent into final position. Ensure the power harness is placed down in the rough-in box. The Power Vent module will sit flush with the stainless steel cover when installed correctly, see ***Figure 11f.***

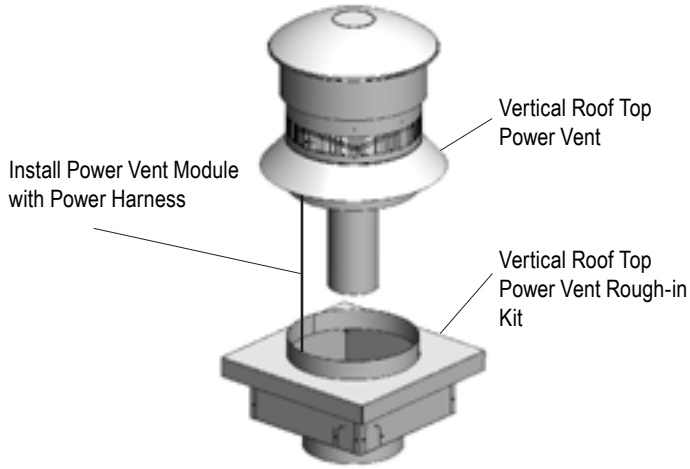

Figure 11f. Installing Power Vent module.

Step 8: Secure the Power Vent module with three stainless steel fasteners angled at 120°, penetrating through the inner stainless steel vent cover, see ***Figure 11g.***

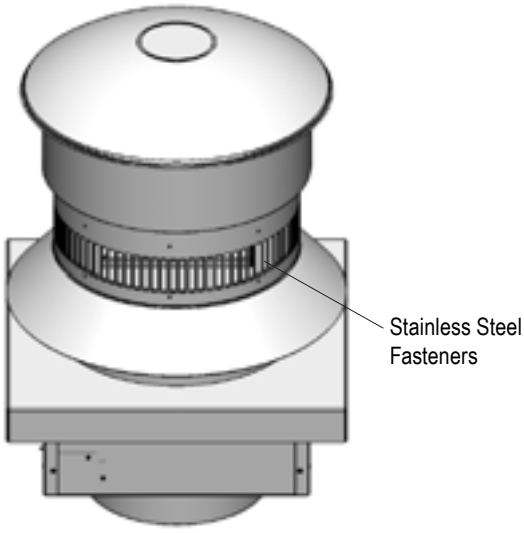

Figure 11g. Completed Power Vent module installation.

Installation

Section 3-3: Installing a Wall Mounted Vent System

This section applies to installations where the shortest possible vent run is through the wall. Refer to **Appendix A - Power Vent locations**, to ensure the planned Power vent location is acceptable. Refer to the table below for vent run requirements.

Vent Configuration	Refer to Figure	Maximum Vent Run (Horizontal + Vertical)	Maximum Elbows†
Straight Horizontal Top or Rear Vent	Figure 12	100 Feet	Six 90° or equivalent †
Multi-Elbow Top or Rear Vent	Figure 12a		
Multi-Elbow with 6' downward vent run Top or Rear Vent	Figure 12b	70 Feet**	

† One 90° elbow is equal to two 45° elbows.
** For every additional 1 foot downward vent run subtract 10 feet from the maximum vent run.

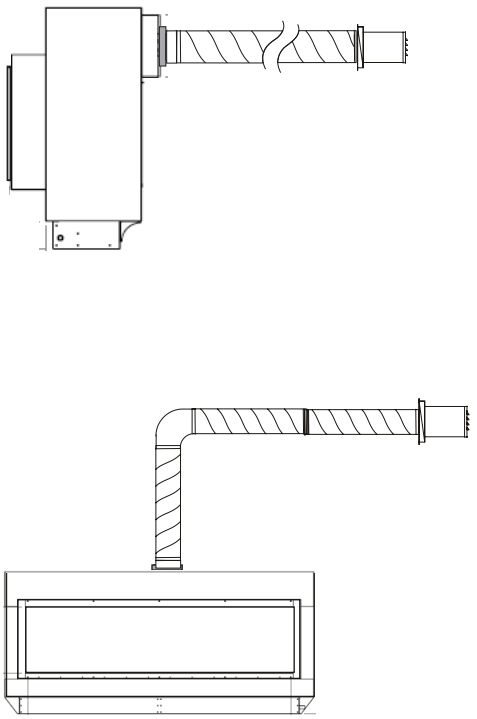

Figure 12. *Straight Horizontal, Top or Rear Vent, Wall mounted power vent.*

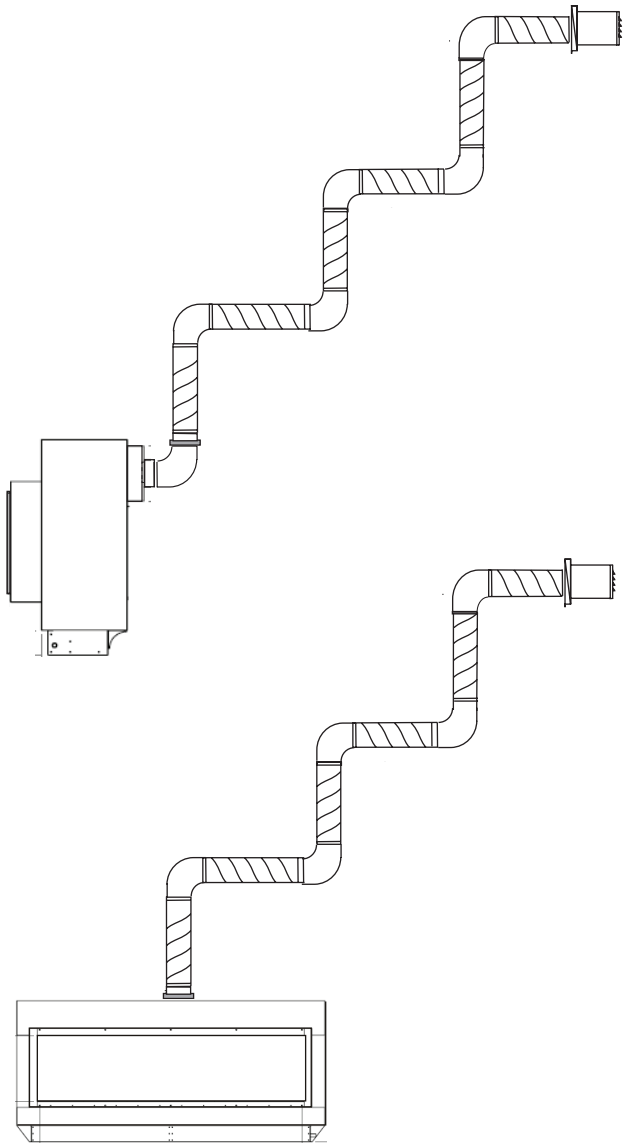

Figure 12a. Multi-Elbow, Top or Rear Vent, Wall mounted power *vent.*

Installation

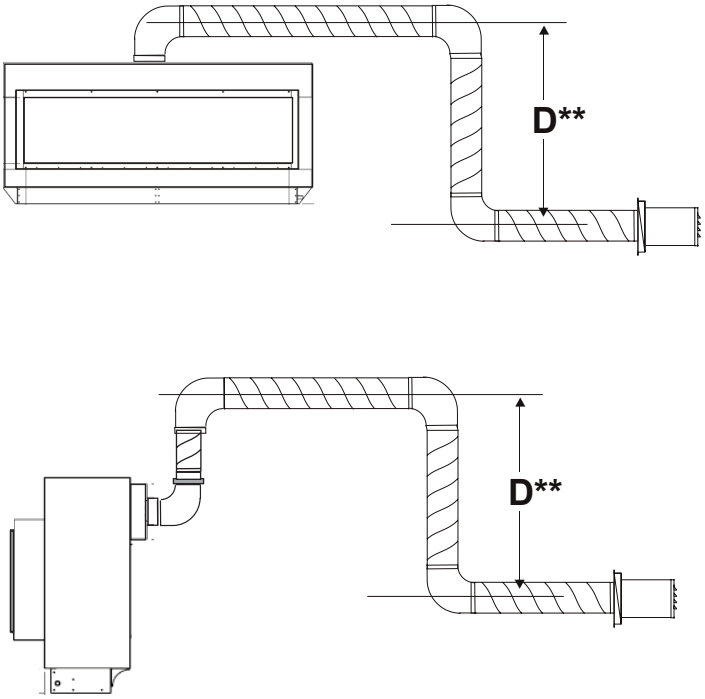

Figure 12b. *Multi-Elbow with downward vent run, Top or Rear Vent, Wall mounted power vent.*

Installation

Section 3-3-1: Installing Wall Mounted Power Vent (EPVRW) and Rough-in Frame (EPVRWF)

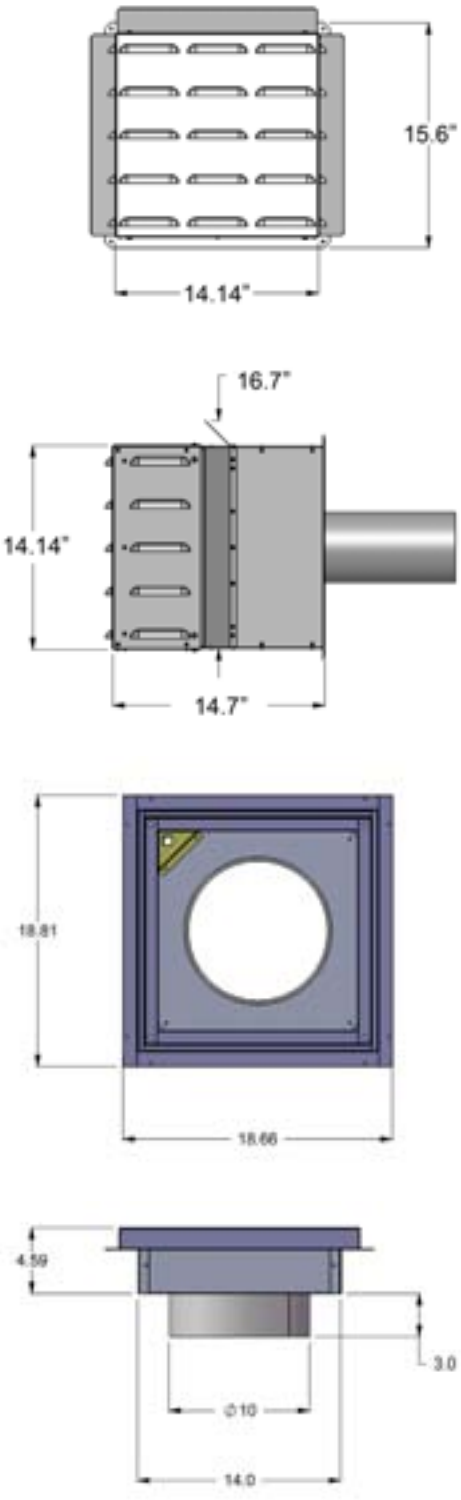

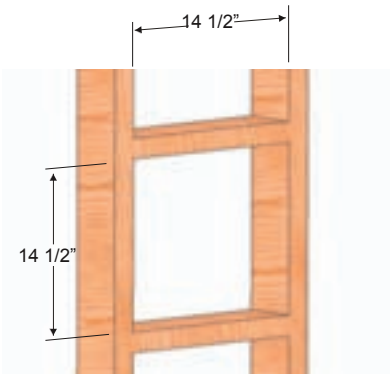

Figure 13. Frame dimensions.

Step 2: Insert the Power Vent Rough-in Kit and secure in place, see ***Figure 13a.***

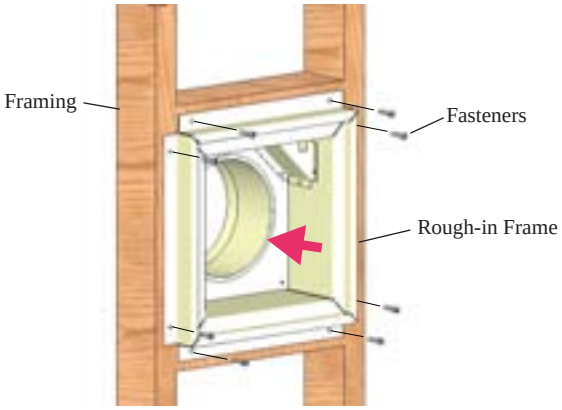

Figure 13a. Securing the Power Vent Rough-in Kit.

Step 3: Remove the bottom collar and conduit mounting frame, see ***Figure 13a.*** Set removed hardware aside until needed for reassembly.

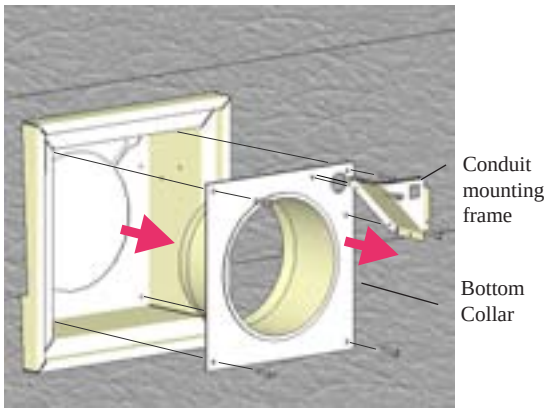

Figure 13b. Installing Rough-in Kit

Installation

Step 4: Insert the conduit from the Power Vent module into the rough-in frame through the two top right entry holes. Remove the nut from the supplied strain relief and place as show in **Figure 13c.**

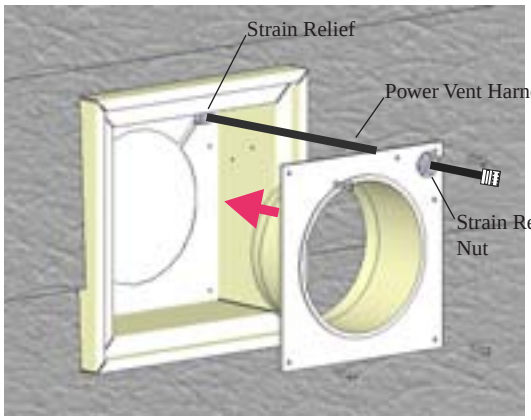

Figure 13c. Installing Power Vent Conduit.

Step 5: Securely fasten bottom collar pan into rough-in frame using the existing hardware, 4-pieces. Tighten strain relief nut onto strain relief.

Step 6: Pull Power Vent connector from behind half way through supplied hole in conduit mounting frame. Snap into place, notches in two plastic wing clip. See ***Figure 13d.***

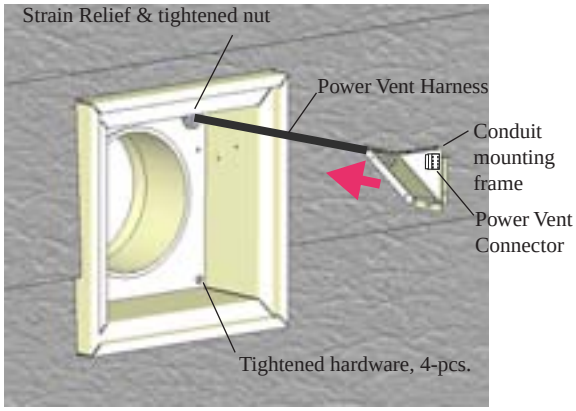

Figure 13d. Installing conduit connector and conduit mounting frame.

Step 7: Fasten conduit mounting frame into place using existing hardware, six pieces. Coil conduit behind cover. See ***Figure 13e.***

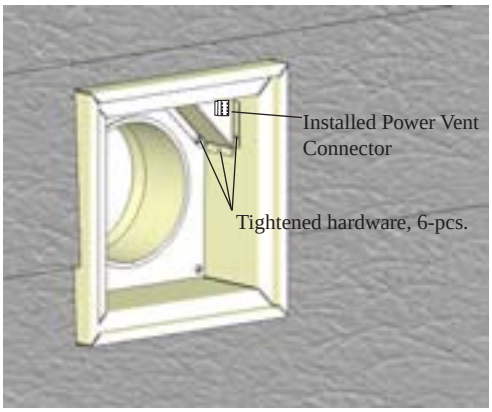

Figure 11e. Assembled Rough-in Kit.

Step 8: Install the Power Vent power harness. Hold the Power Vent in close proximity to the assembled Rough-in Kit. Plug in the Power Vent harness. See ***Figure 13f.***

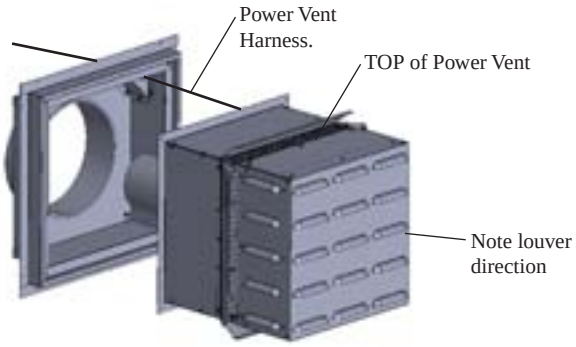

Figure 13f. Installation of Power vent harness.

Step 9: Install the Power Vent. Place the Power Vent into the rough-in frame, aligning the Power Vent into final position. Ensure the power harness is placed down in the rough-in frame when placing the Power Vent. Secure the Power Vent in place with the supplied hardware, 4 pieces. See ***Figure 13f.***

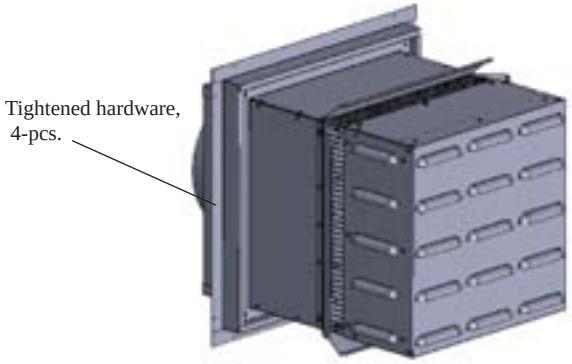

Figure 13g. Completed Power Vent installation.

Installation

Section 3-4: Venting components

The following components and associated Montigo part numbers are for installation of a roof or wall mounted Power Vent. **Only use Montigo Vent Components.** Use of non-Montigo parts will **VOID** the warranty and may impede operation of the fireplace.

A - Termination	**EPVRR (Roof Mount 5"/10")** **EPVRW (Wall Mount 5"/10")**
B - Frame Kits	**EPVRRF (Roof Mount 5"/10")** **EPVRWF (Wall Mount 5"/10")**
C - Flex Sections	**RFL1 (12" f/f Section)** **RFL2 (24" f/f Section)** **RFL3 (36" f/f Section)** **RFL4 (48" f/f Section)** **RFL6 (72" f/f Section)**
D - Rigid Sections	**RXT - 10 (10" f/f Section)** **RXT - 20 (20" f/f Section)** **REXT - 1 (12" f/m Section)** **REXT - 2 (24" f/m Section)** **REXT - 3 (36" f/m Section)** **REXT - 4 (48" f/m Section)** **REXT - 6 (72" f/m Section)**
E - Elbows	**REL-90MM (m/m 90° Elbow)** **REL-90FF (f/f 90° Elbow)** **REL-90FM (f/m 90° Elbow)** **REL-45FM (f/m 45° Elbow)**
F - Support Ring & Plate	**RSPXT-10**
G - Firestop	**FS-10**
H - Heat Shield	**RHS102**

Connection and installation of the vent components should adhere to the following guidelines:

- Use any combination of rigid and flex pipe as required and in any orientation (Male connectors can face in any direction).
- Flex sections may be stretched up to 50% of their total length (e.g. a 24" section maybe stretched to 36").
- Ensure the pipe ends male to female slide in a minimum of 1 1/2" of overlap.
- Connect all vent sections using a minimum of three sheet metal screws on the outer pipe flue.
- Ensure all runs are supported with a minimum of 3 supports per 10' of venting.
- When hanging/ supporting venting, ensure that 1" clearance is maintained on sides and bottom of vent runs and 2" above horizontal vent runs to any combustible material.
- Rigid pipe may be cut less than half way from the **female end only.**
- Ensure when cutting sections of rigid pipe to maintain integrity of internal supports.
- Place the springs, supplied with the pipe kit, between the outer and inner pipes to keep the pipes separate and avoid any possible hot spots.
- Montigo recommends the use of a flex section for the final pipe connected directly to the fireplace offering greater flexibility of installation and absorption of movement.
- Firestops must be installed as required by National & local codes.
- Montigo recommends that all exterior corners and joints be sealed with exterior caulking. However, we encourage you to consult your Building Envelope Engineer or Waterproofing Consultant for further recommendations.

IMPORTANT:

Please Refer to your Building Envelope Engineer or Waterproofing Consultant for a review of ALL penetrations through exterior walls or the roof.

Installation

Section 3-5: Heat Shields

Installing a Wall Mounted RHS102 Heat shield

The RHS102 Heat shield **must be used if vent pipe passes through a wall or ceiling within 6' of the unit.**

To install the RHS102, Slide the Inner Section over the vent pipe that will connect to the fireplace. Then fasten the vent pipe to the back of the fireplace with a minimum of three sheet metal screws. From the outside slide the RHS102 outer section on. To complete the installation fasten the Heat Shield Outer Section & inner section to the structure. See ***Figure 14.***

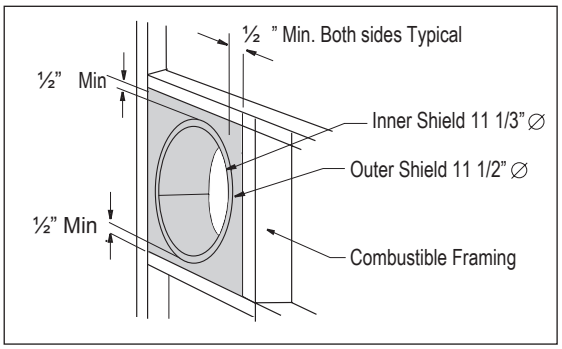

Figure 14. *RHS102 Installation. (Install by sliding over vent pipe where it passes through the combustible construction).*

Installation

Section 4: Wiring

Installing the Fireplace Control Box

Install the Fireplace Control Box in an accessible location. The location should be where maintenance, adjustments and service may be made easily.

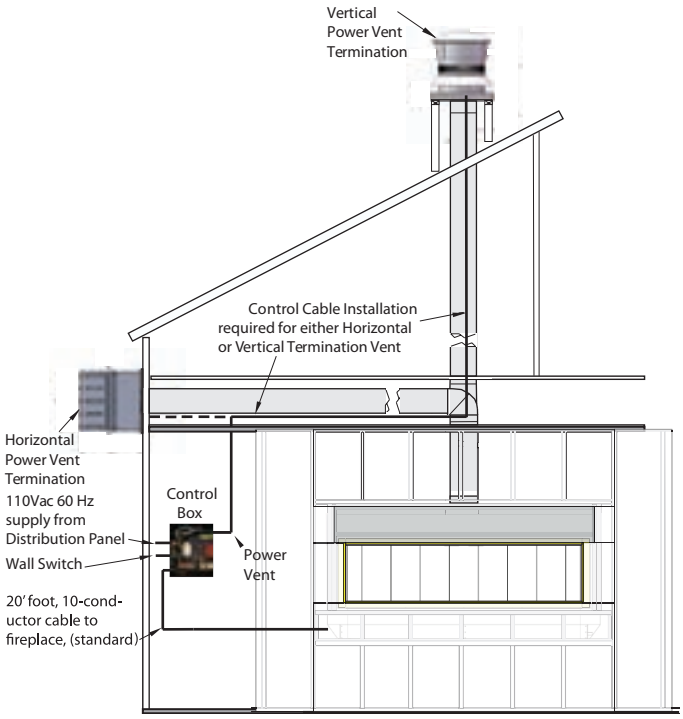

Figure 15. R520* / R620* Series *Control Box / Power Vent Wire Routing Diagram*

⚠ CAUTION

Ensure the wires are properly isolated from metal parts or control system will be damaged.

Installation

Installation of Electrical Supply

The **R520* / R620*** is supplied with an external electrical control panel pre-wired by the factory. The control box is connected to the fireplace with a 20 foot long 10-conductor cable that will communicate with the fireplace. The control panel should be located where it can be accessed when the fireplace has been finished in.

The power cord from the power vent module plugs into the side of this panel. The 20 foot low voltage wire is attached and connected to this panel as well. Connect a single pole On/Off switch (Black and White) to these two wires at a location of your choice, *(See Installing the Remote Switch).*

Montigo supplies 20' of low voltage wire to the electrical control panel. Connect the two wire harnesses to a standard single pole ON/OFF switch to the location of your choice. You may extend these wires up to 100' in length with a wire of equal quality.

Installations in Canada must be electrically grounded in accordance with **CSA C22.1** Canadian Electrical Code Part 1 and/or Local Codes.

Installations in the USA must be electrically grounded in accordance with local codes or, in the absence of local codes, with the National Electrical Code, **ANSI/NFPA 70.**

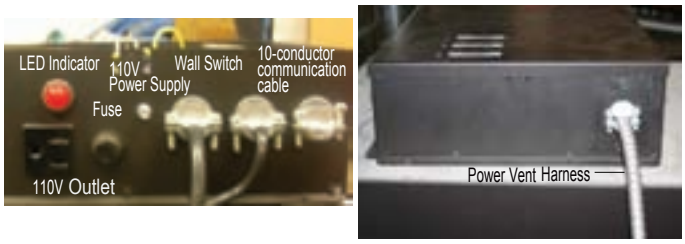

Left-side View Right-side View

Figure 15b. R520* / R620* Control Module

Installing the Remote Switch

The **R520* / R620*** may be connected to a wall switch. The system operates on a 24V AC. **DO NOT** connect this circuit to an external power source.

Figure 15c. *(Remote Switch Wire connection)*

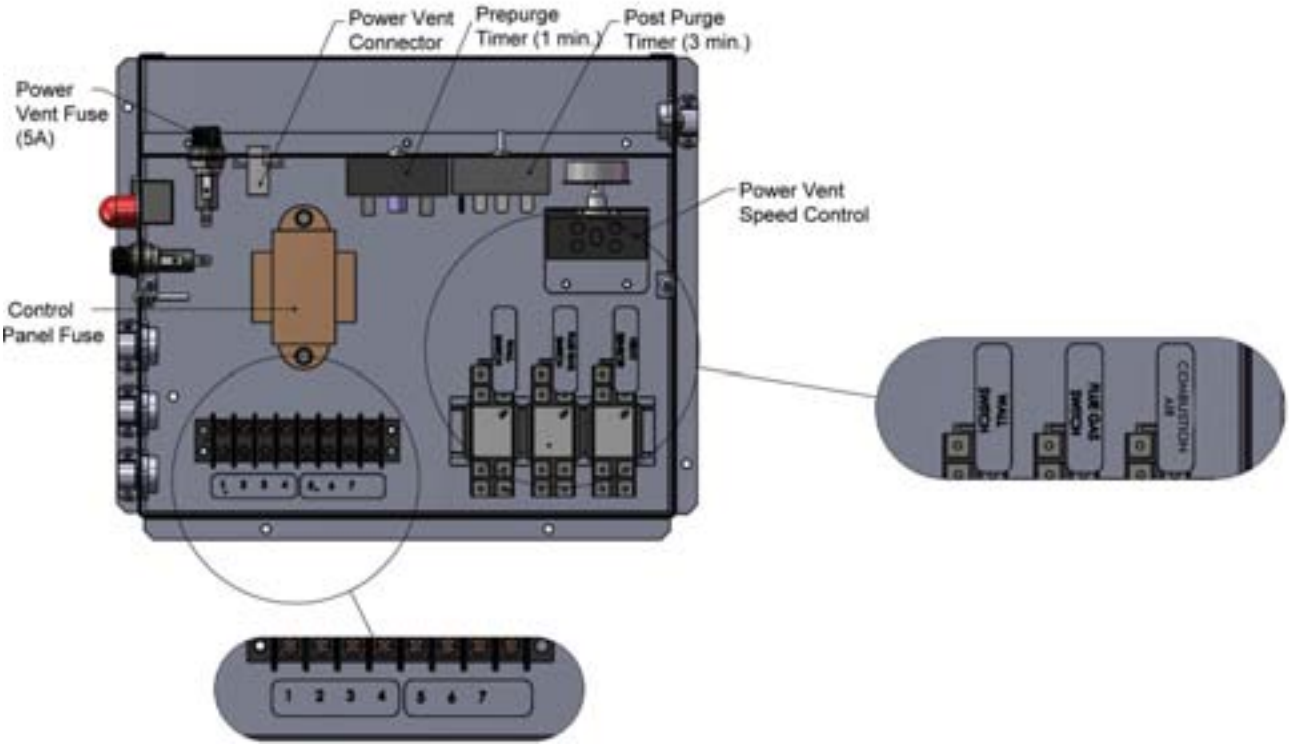

Figure 15a. *(Control Panel Overview)*

Installation

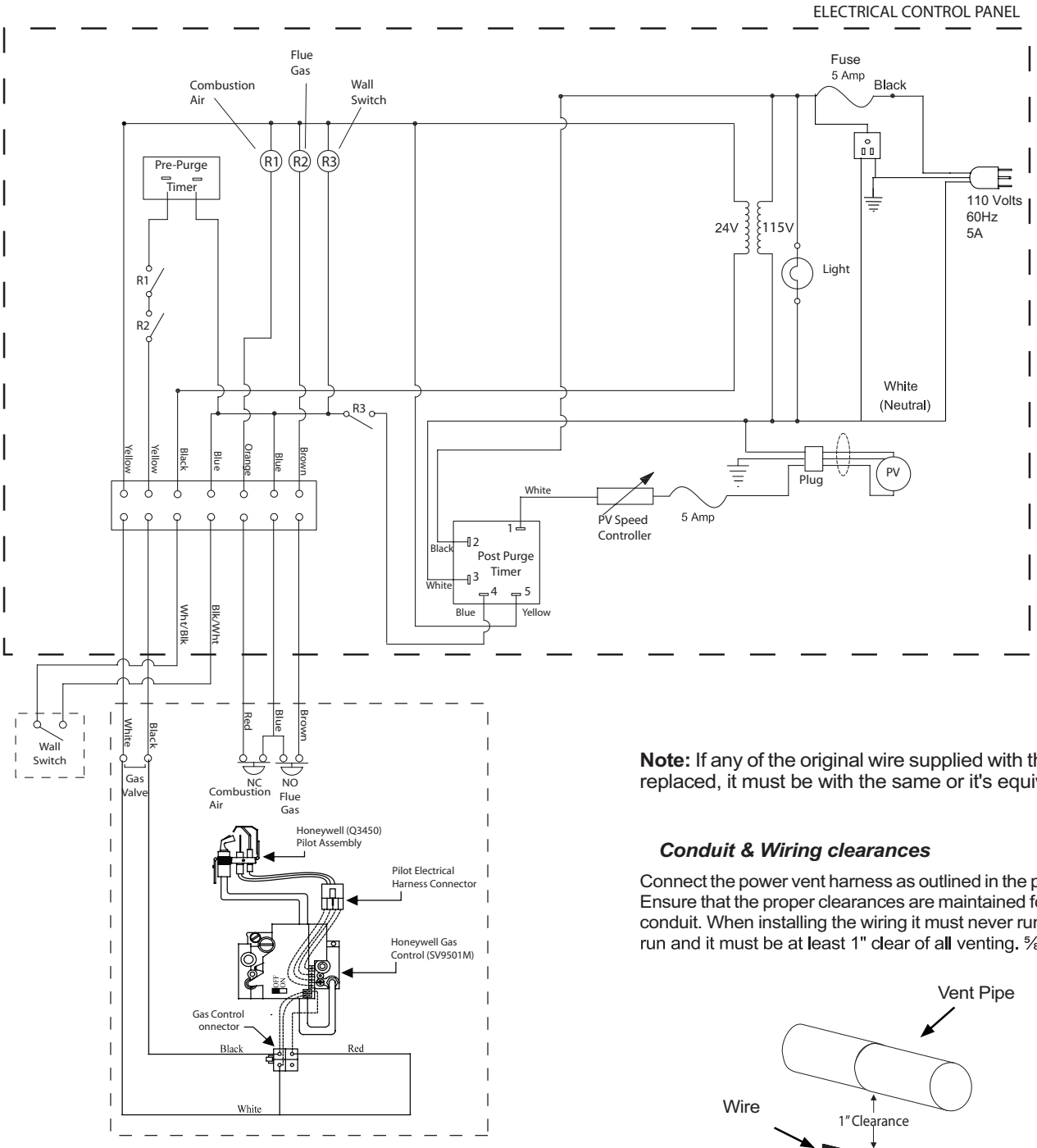

Figure 16. ***R520* & R620**** *HSI Wiring Diagram*

Note: If any of the original wire supplied with the appliance is replaced, it must be with the same or it's equivalent.

Conduit & Wiring clearances

Connect the power vent harness as outlined in the previous section. Ensure that the proper clearances are maintained for the wiring and conduit. When installing the wiring it must never run above the vent run and it must be at least 1" clear of all venting. ⅝

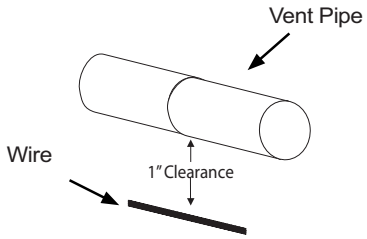

Figure 16a. *Conduit and Wiring Clearances.*

Installation

Section 5: Installing the gas line

Fuel Type

Verify that your fireplace is compatible with your available gas type. Natural Gas or Propane shown by "N" or "L" in your model number on rating plate.

Gas Pressure

Optimum appliance performance requires proper input pressures.

Gas line sizing requirements will be determined in ANSI Z221.3 National Fuel Gas Code in the USA and CAN/CGA B149 in Canada.

Pressure requirements (during operation):

Pressure Requirements		
Gas Pressure	**Natural Gas**	**Propane**
Minimum Inlet Pressure	5.5" W.C.	11" W.C.
Manifold Pressure	3.5" W.C.	10" W.C.

The manifold outlet pressure is set from the factory to the appropriate pressure but should be verified.

To check pressures, control valves have a provision to remove a 1/8" N.PT. plug to be fitted with a hose barb.

Montigo requires a service shut off valve be located in an accessible location to isolate the gas supply.

Only install gas shut-off valves approved for use by the state, province, or other governing body in which the fireplace is being installed.

GAS CONNECTION

See **Figure 16** below for location of gas line access.

Flexible gas connectors must not exceed 3 feet in length, unless allowable within local regulations.

Connect incoming gas line to the 1/2" Male NPT gas inlet.

Purge all air out of gas line before connecting port.

Check appliance connection, valve and valve train under normal operating pressure with a commercially available leak check solution.

DO NOT USE A FLAME OF ANY KIND TO TEST FOR LEAKS.

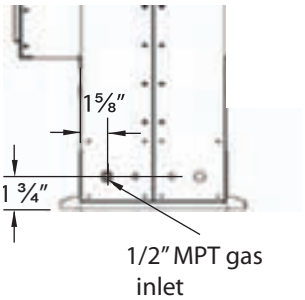

Figure 17. *Gas Inlet Supply location.*

Located next to the Gas Inlet is the Combustion Air Switch Sensor Line.

Do NOT obstruct or alter the Combustion Air Switch Sensor Line.

Figure 17a. *Identifying the Gas Inlet and Combustion Air Switch Sensor Line*

⚠ DANGER

After gas line is connected, each appliance connection, valve and valve train MUST be checked while under normal operating pressure with either a Liquid Solution, or Leak Detection Device, to locate any source of leak. Tighten any areas where bubbling appears or a leak is detected until bubbling stops completely or leak is no longer detected. DO NOT use a flame of any kind to test for leaks. A fire or explosion will occur, causing serious injury, property damage or death.

NOTICE

When pressure testing the fireplace, Gas line, and input system follow the appropriate local codes for your area. DO NOT connect the fireplace to pressures in excess of 1/2lb. This will damage the gas control valve.

Installation

Section 6: Testing the system

6-1: Testing the system before gas connection

Note: No gas is needed to test the system

The **R520*/R620*** Control and Power Vent System can be safely tested prior to finish framing the Fireplace. This test can be done quickly and efficiently to ensure all systems function according to the design specifications.

The fireplace should be installed on the rough-in frame, ***Figure 3*** with the Power Vent Module and the Vent run connected.

- The control panel is supplied with a power cord plug in.
- Plug it into a extension cord or any other 110 Volt power supply.
- If the red LED is illuminated (beside the fuse) you have power to the panel.
- If no LED, check fuse and replace with equally rated fuse.
- Turn the wall switch to the on position.
- Wall switch and combustion air LED light up immediately. approximately 30 seconds later when the power vent reaches factory set speed, the flue gas switch LED will light up approximately 1 minute after flue gas LED is lit the gas valve will turn on. You can hear a clicking sound and the Hot Surface Ignitor will glow red. This confirms the control system operation. Not: If the flue gas LED does not light up after 1 minute, slowly increase the power vent speed until the LED turns on. Speed controller located inside the control box, see figure 15a

Figure 18. *LED Indicators*

6-2: Testing the system with gas connection

(*Highly recommended)*

The **R520*/R620*** Control and Power Vent System can be safely tested prior to finish framing the Fireplace. This test can be done quickly and efficiently to ensure all systems function according to the design specifications.

The fireplace should be installed on the rough-in frame, ***Figure 3*** with the Power Vent Module and the Vent run connected.

- Turn gas supply valve on
- The control panel is supplied with a power cord plug in.
- Plug it into a extension cord or any other 110 Volt power supply.
- If the red LED is illuminated (beside the fuse) you have power to the panel.
- If no LED, check fuse and replace with equally rated fuse.
- Turn the wall switch to the on position.
- Once the fireplace is running normally, confirm manifold pressure and supply pressure.

Installation

Section 7: Finishing the fireplace

As shown in ***Figure 19***; Install the supplied Non-combustible cement board to overlap the new Horizontal & Vertical 2 x 4's, *See* ***Figure 5***. Place the Non-combustible wall board above the fireplace throat, allowing 1/8" clearance from the rim above the fireplace opening. Pre-drill the board with 1/8" drill and secure to framing with Nails, use flat heat sheet metal screws to fasten the board to the metal header.

(Non-Combustible cement board **R520*:** 72 1/2" x 15 1/2" **R620*:** 82 1/2" x 15 1/2")

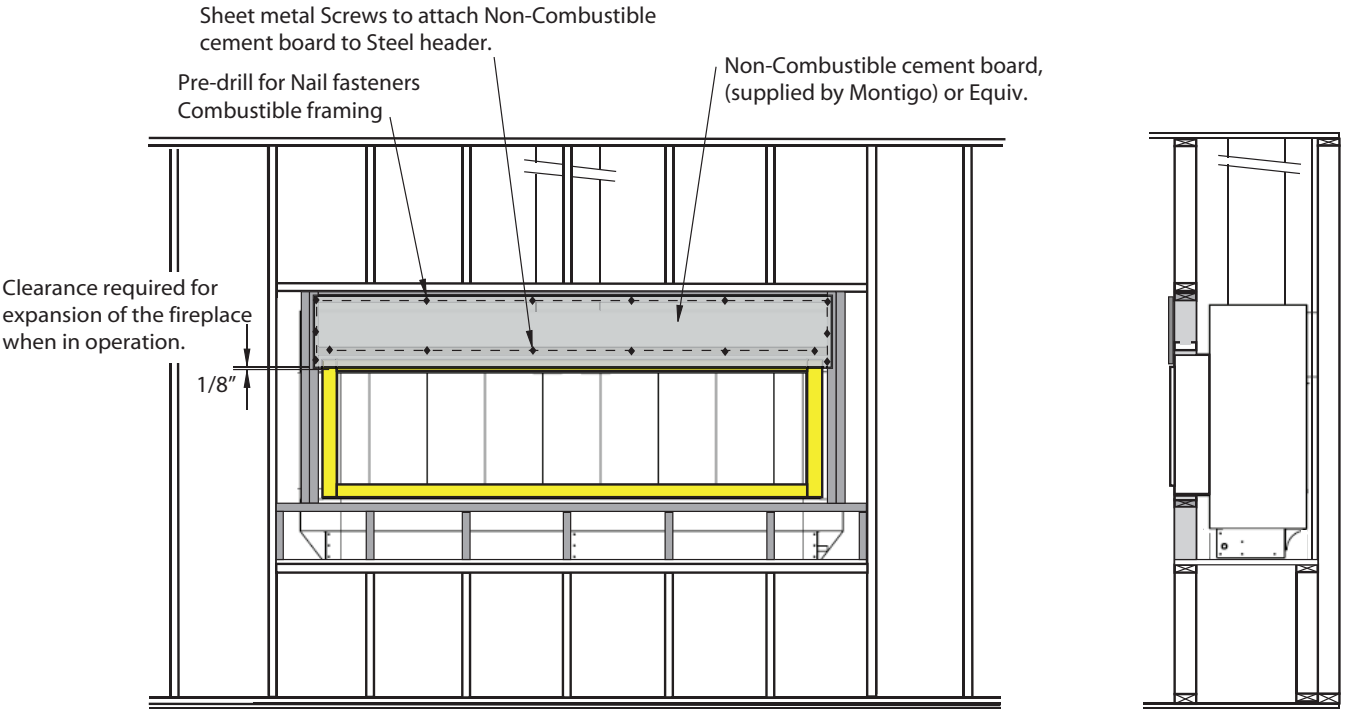

Figure 19. Non-combustible Board over the Fireplace, *(**supplied by Montigo**)*.

Cut standard Gyproc / Drywall board to complete the installation of the surround. Fit the edge of the board to the rim around the fireplace opening. Fasten the board in place using standard drywall screws.

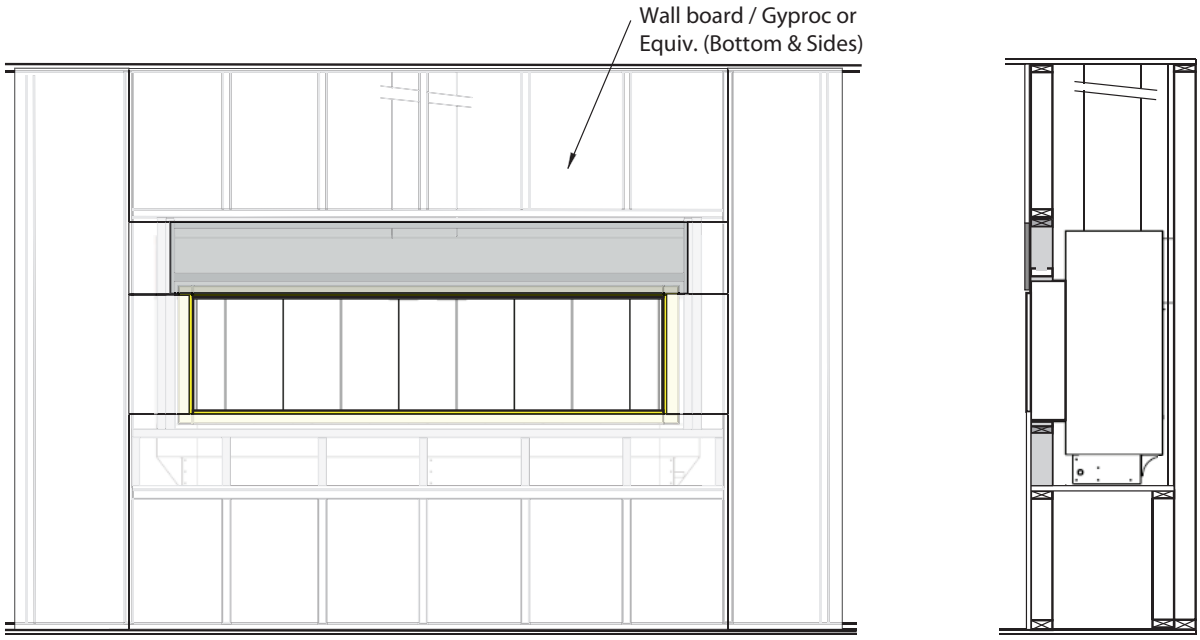

Figure 19a. *Fireplace installation (Cut the remainder of Gyproc / Wall board to complete the fireplace surround).*

Installation

Finishing Around the Fireplace

Non-combustible mantels and mouldings may be safely installed over the top and on the front of the fireplace provided that they do not project beyond shaded area shown in **Figure 20.**

The face of the fireplace may be painted to match the room decor, provided you use a heat-resistant paint. Decorative facing must not extend past the fireplace opening at all, because it will interfere with the access to retainers for removal of glass door.

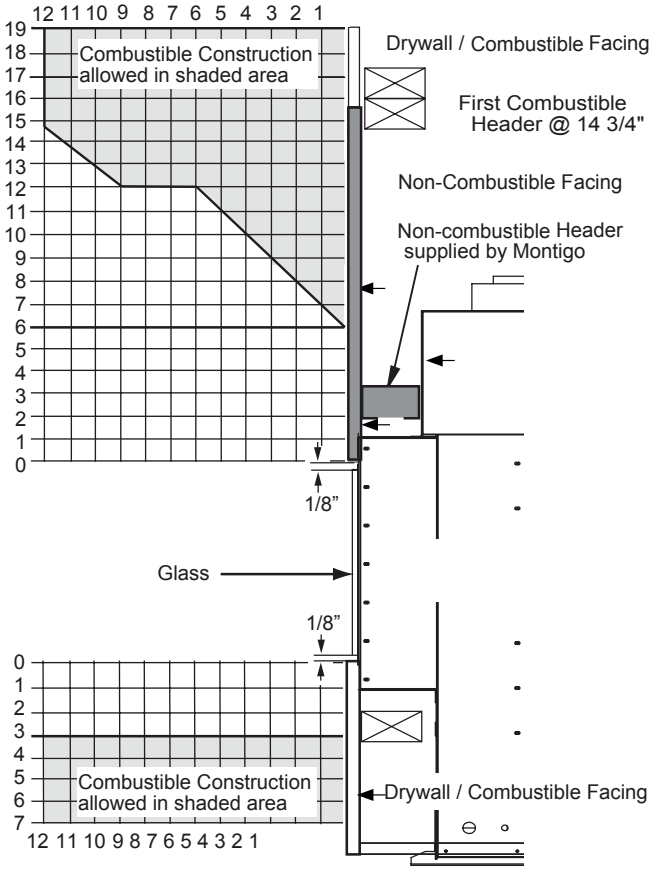

Figure 20. *Combustible mantles and facings. (Not to scale)*

Mantels & Surrounds

NOTE: National Canadian Gas Association mantel test requirements are for fire hazard prevention to combustible materials.

New technology, to meet consumer and government demands for the wise use of energy, has prompted us to manufacture many models of fireplaces which are hot, fuel and energy efficient.

Please be aware; temperatures over the mantel will rise above normal room temperature and walls above fireplace may be hot to touch.

We recommend careful consideration be given to the effects of elevated mantel temperatures which may be in excess of product design, for example: candles, plastic or pictures. This can cause melting, deformation, discoloration or premature failure of T.V. and radio components.

Side wall clearances are 6". Combustible surrounds may be installed with 6" clearance to the side of the fireplace as shown in **Figure 21**.

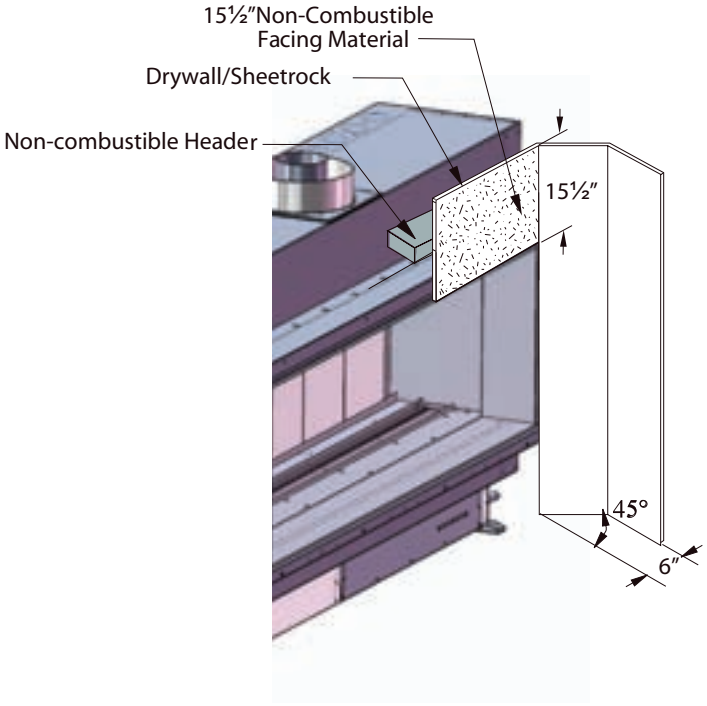

Figure 21. *Combustible surrounds.*

Installation

Section 8: Removing & Installing the Door

Removing the door trim:

Follow the steps below to remove, or install the **R520* / R620*** fireplace door trim.

Step 1:
Grasp the trim on either side of the door with the tips of your fingers. *(Both sides Typ.)* **Pull firmly to release the trim from the internal door magnets.**

Step 2:
Then, pull the trim from the top of the door, as shown.

Step 3:
Remove the trim from the bottom of the door as shown.

Step 4:
Remove the other side, as shown in Steps 1 - 3.

Removing the door:

Follow the steps to remove, or install the **R520*/R620*** fireplace door.

Step 1:
Remove glass suction cups from box and place on Glass door. (The tool may not be exactly as shown).

Step 2:
Place the suction cups on the glass door, spaced evenly. (**Ensure they are firmly attached, and secured.)**

Step 3: Lifting the glass panel.
Hold the Tools firmly and lift the glass panel up and out of the lower track (Into the upper track). Tilt the lower edge of the door panel outwards.

Step 4:
Ensure the top edge of the glass is fully removed from the upper outer track, and Tilt / Lift away Cautiously from the fireplace. Store in a safe location until time to replace.

Reinstalling the door:

Follow the four previous steps to re-install the R-Series fireplace door.

Installation

Section 9: Installing the Firestones

The **R520* / R620*** is supplied with glass firestones. To install the firestones remove the trim and door as shown in the previous section. Follow these instructions to ensure all parts are removed or replaced as required. Once the trim and glass door is removed, place the firestones randomly around the burners as shown in **Figures 22 and 22a**.

Note: DO NOT cover the burner with firestones or any other media.

Figure 22. *Completed glass Firestone installation.*

Figure 22a. *Operating Propane gas fireplace with designer glass Firestones surrounding burner tray.*

Firestones

R520* requires six 3lbs bags for a total of 18lbs of firestones

R620* requires eight 3lbs bags for a total of 24lbs of firestones

Optional River Rocks

The R520*/R620* has the option of installing the cultured rocks which mimic real stone. These may be spaced at random, or in a visual pattern of your preference. See the Montigo web site for photographs and ideas.

www.montigo.com

NOTICE

Do not operate this fireplace without the glass door or with a broken glass door.

Operation

⚠ WARNING

If the information in these instructions is not followed exactly, a fire or explosion may result causing property damage, personal injury or death.

STARTUP SEQUENCE:

1) Turn the wall switch ON

2) The combustion air switch relay will light up and the blowers will start. Within 10 seconds the flue gas air switch will turn on.

3) The glow plugs will start to glow 45 - 60 seconds after the pre-purge period.

4) If the pilot does not light the gas valves will turn the glow plugs off after 20 seconds

5) This may need to be done three or four times to bleed all of the air out of the gas lines within the fireplace

6) Turning the switch OFF and then ON again will reset this start up sequence

7) Once the pilot is burning the main burner will turn on and the fireplace will be functional for a quick start up on next use.

CAUTION

- This fireplace has been set up at the factory for a determined air volume though the venting system.
- This fireplace will not operate unless the correct air movement is detected by our control system.
- Should you have any problems with your start up, consult your Montigo Dealer.

Operation

Honeywell Intermittent Pilot

FOR YOUR SAFETY - READ BEFORE LIGHTING:

A. This appliance is equipped with an ignition system that lights the pilot burner automatically. Do not attempt to light the pilot by hand.

B. **BEFORE LIGHTING** smell all around the appliance area for gas. Be sure to smell next to the floor because some gas is heavier than air and will settle on the floor.

What To Do If You Smell Gas:

- Do not try to light any appliance.
- Do not touch any electrical switch; do not use any phone in your building.
- Immediately call your gas supplier from a neighbour's phone. Follow the gas supplier's instructions.
- If you cannot reach your gas supplier, call the Fire Department.

C. Do not use this appliance if any part has been under water. Immediately call a qualified service technician to inspect the appliance and to replace any part of the control system, and any gas control which has been under water.

Maintenance

Section 10: Cleaning and Maintenance

General

- **Have the fireplace and installation inspected yearly**. The inspection must include, but is not limited to, the following:
  - A visual check of the entire vent system and termination.
  - An inspection of the door gaskets to ensure a proper seal.
  - An inspection of the burner, vent run, and primary air openings.
  - An inspection of the gas valve, gas components, and pilot flame. For your convenience a 1/8" manifold pressure tap is supplied on the gas valve for a test gauge connection.
- For **Natural Gas** this appliance requires a minimum inlet pressure of 5.5" W.C. and a manifold pressure of 3.5" W.C.
- For **Propane Gas** this appliance requires a minimum inlet pressure of 11" W.C. and a manifold pressure of 10" W.C.
- Always keep the fireplace area clear and free of combustible materials, as well as gasoline and other flammable vapors and liquids.
- Do not use this appliance if any part has been under water. Immediately call a qualified service technician to inspect the appliance and to replace any part of the control system and any gas control which has been under water.

NOTICE

Do not use ammonia based or abrasive cleaners on the glass, they will permanently etch the surface. Use an approved gas fireplace glass cleaner such as Kel-Kem or White off.

Cleaning

When the fireplace is first activated, there may be some smoking and a visible film may be left on the glass. This is a normal condition, and is the result of burning of protective coatings on new metal.

- Glass must be cleaned periodically to remove any film (which is a normal by-product of combustion) which may be visible. Film can easily be removed by removing the door, as shown on Page 29. Handle the door carefully, and clean it with non-abrasive, non-ammonia based glass cleaners. One of the most effective products is Kel-Kem.
- Silicone seals on inner door during initial firing will "off gas", leaving a visual deposit of a white substance on combustion chamber walls. This can easily be removed using normal household products.
- Use a vacuum cleaner or whisk broom to keep the control compartment, burner, and firebox free from dust and lint.

Procedure for Checking Calibration of Flue Gas Switch

1). Disconnect power vent harness from the plug in the control box.

2). Turn wall switch 'ON'.

3). Monitor flue gas switch LED for 2 minutes and ensure LED does not come on or the glow plug will not light during this period.

4). Reconnect power vent harness to plug in the control box.

Gas Control Valve

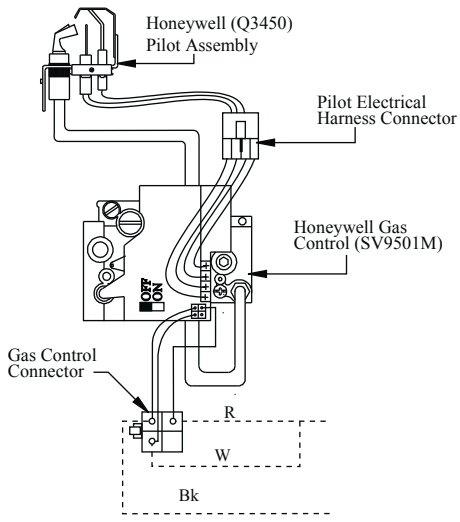

Figure 23. *Gas valve.*

Appendix

Appendix A: Power Vent Locations

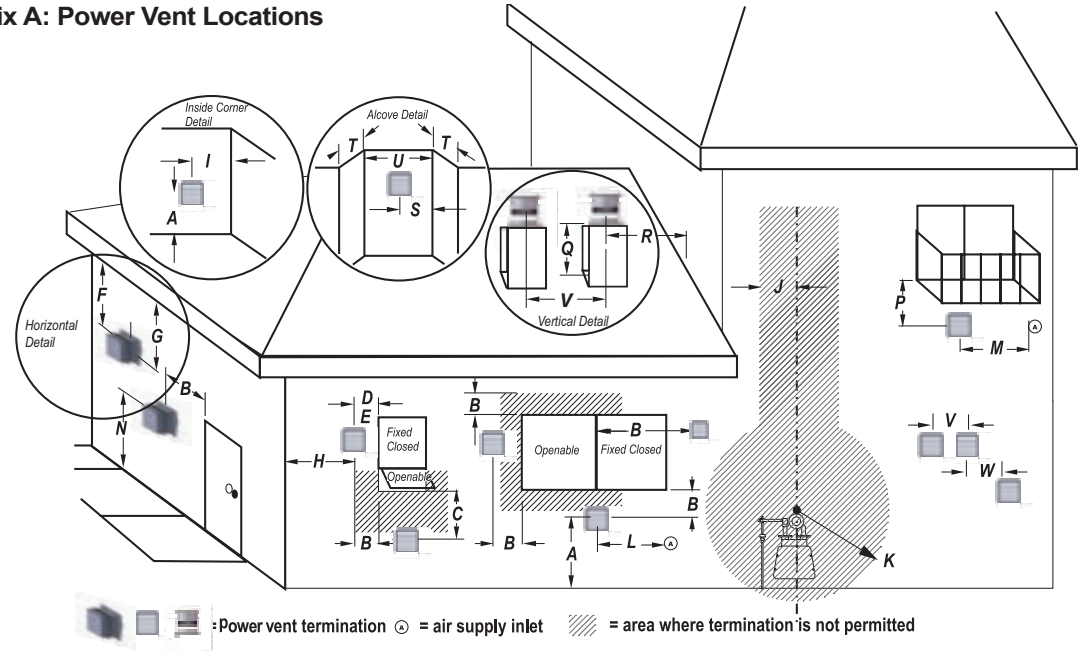

	Location	Canada*	USA**
A	*clearance to the termination frame above grade, veranda, porch, deck, or balcony*	30 inches	30 inches
B	*clearance to top of doors or operable windows*	12 inches	12 inches
C	*clearance to sides or bottom of door or operable windows*	4 feet	4 feet
D	*clearance to permanently closed window when installed with approved gas penetration termination*	0	0
E	*clearance to permanently closed window Recommended to prevent condensation*	30 inches	30 inches
F	*clearance to ventilated soffit located within a horizontal distance to 24 inches from centerline of termination*	22 inches	22 inches
G	*clearance to unventilated soffit*	30 inches	30 inches
H	*clearance to outside corner*	30 inches	30 inches
I	*clearance to inside corner*	30 inches	30 inches
J	*clearance to each side of the vertical centerline of a metre or regulatory assembly to a maximum vertical distance of 15ft*	3 feet	3 feet
K	*clearance to service regulator vent outlet*	3 feet	3 feet
L	*clearance to non mechanical air supply inlet to the building or combustion air inlet to other appliance for appliance <= 100.000 BTU/H (30 KW)*	12 inches	4 feet
L	*clearance to non mechanical air supply inlet to the building or combustion air inlet to other appliance for appliance > 100.000 BTU/H (30 KW)*	6 feet	4 feet
M	*clearance to forced air supply inlet*	6 feet	3 feet above air inlet
N+	*clearance above paved sidewalk or paved driveway located on public property*	7 feet	7 feet
P++	*clearance under veranda, porch, deck, or balcony*	30 inches	30 inches
Q	*clearance above roof*	2 feet	2 feet
R	*clearance to adjacent walls and neighboring buildings*	30 inches	30 inches
S	*clearance from corner in recessed location*	30 inches	30 inches
T	*Maximum depth of recessed location*	48 inches	48 inches
U	*Maximum width for back wall of recessed location*	60 inches	60 inches
V	*Horizontal clearance between two terminations that are level*	30 inches	30 inches
W	*Horizontal clearance (centre to centre) between two terminations that are not level*	30 inches	30 inches

* Based on CGA B149.1 Natural Gas and Propane installation code. Local codes may vary, please check with local regulatory agency.
** Based on ANSI Z223.1/NFPA 54 National Fuel Gas Code. Local codes may vary, please check with local regulatory agency.
+ A vent shall not terminate directly above a sidewalk or paved driveway which is located between two single family dwellings and serve both dwellings.
++ Only permitted if veranda, porch, deck, or balcony is fully open on a minimum of two sides beneath the floor.

Appendix

Appendix A: Power Vent Locations

EPVRR Vertical Power Vent Detail

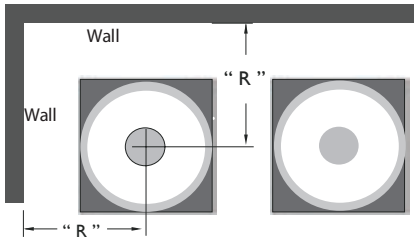

Top View

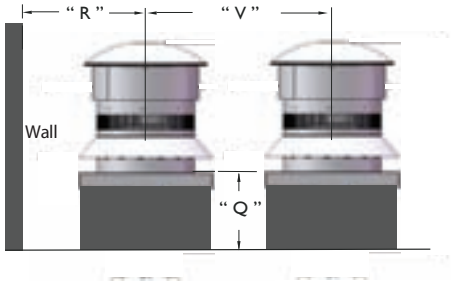

Front View

EPVRW Horizontal Power Vent Detail

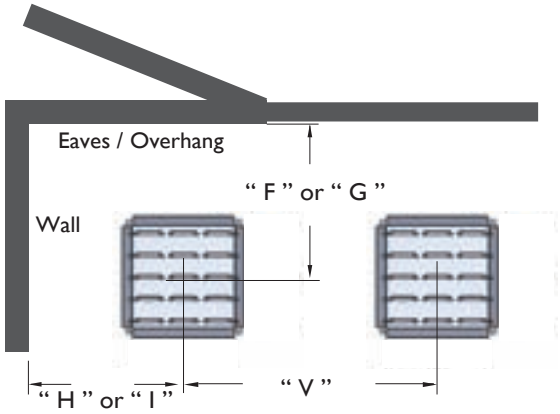

Front View

Not Acceptable

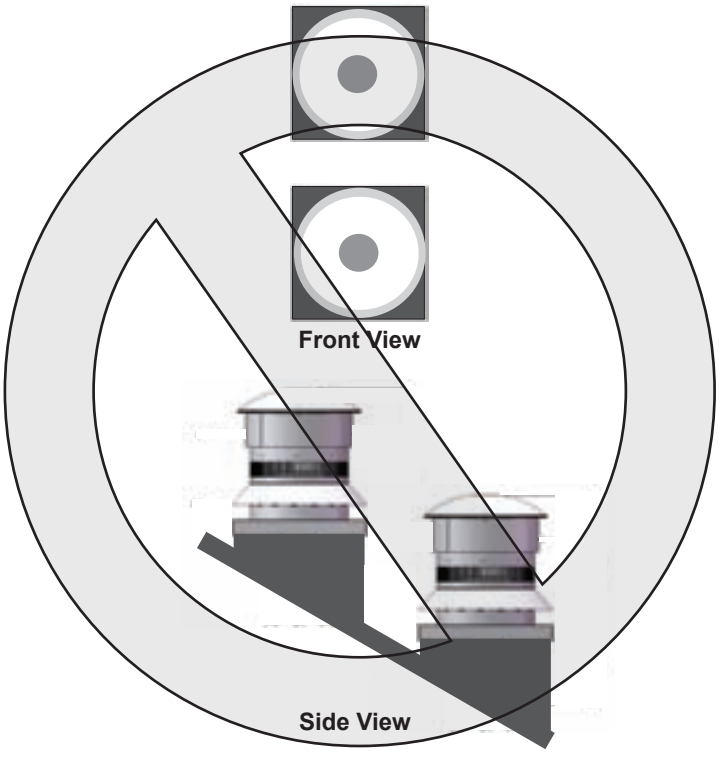

Appendix

Appendix B: Warranty

The Warranty

The Companies warrants the Montigo Gas Appliance to be free from defects in materials and workmanship at the time of manufacture. On the Montigo fireplace, there is a ten-year warranty on the firebox and its components, a five-year warranty on the main burner and pilot burner, and a one-year warranty on the gas control valve, fibre logs and Power Vent Module. The Glass, plated / painted finishes, and refractory lining are exempt from the warranty.

Remedy And Exclusions

The coverage of this Warranty is limited to all components of the Gas Appliance manufactured by The Companies.

This Warranty only covers Montigo Gas Appliances installed in the United States or Canada.

If the components of the Gas Appliance covered by this Warranty are found to be defective within the time frame stated (see The Companies right of investigation outlined below). The Companies will, at its option, replace or repair defective components of the Gas Appliance manufactured by The Companies at no charge, and will also pay for reasonable labour costs incurred in replacing or repairing components. If repair or replacement is not commercially practical, The Companies will, at its option, refund the purchase price of the Montigo Gas Appliance.

This Warranty covers only parts and labour as provided above. In no case shall The Companies be responsible for materials, components, or construction which are not manufactured or supplied by The Companies, or for the labour necessary to install, repair or remove such materials, components or construction. All replacement or repair components will be shipped F.O.B. the nearest The Companies factory.

Qualifications To The Warranty

The Gas Appliance Warranty outlined above is further subject to the following qualifications:

(1) The Gas Appliance must be installed in accordance with The Companies installation instructions and local building codes. The Warranty on this Montigo Gas Appliance covers only the component parts manufactured by The Companies. The use of components manufactured by others with this Montigo Gas Appliance could create serious safety hazards, may result in the denial of certification by recognized national safety agencies, and could be in violation of local building codes. This warranty does not cover any damages occurring from the use of any components not manufactured or supplied by The Companies

(2) The Montigo Gas Appliance must be subjected to normal use. The Gas Appliances are designed to burn gas only. Burning conventional fireplace fuels such as wood, coal or any other solid fuel will cause damage to the Gas Appliance, will produce excessive temperatures and will result in a fire hazard.

Limitations On Liability

It is expressly agreed and understood that The Companies sole obligation, and purchaser's exclusive remedy under this Warranty, under any other warranty, expressed or implied, or in contract, tort or otherwise, shall be limited to replacement, repair, or refund, as specified above.

In no event shall The Companies be responsible for any incidental or consequential damages caused by defects in its products, whether such damage occurs or is discovered before or after replacement or repair, and whether or not such damage is caused by The Companies negligence. Some states do not allow the exclusion or limitation of incidental or consequential damages, so the above limitation or exclusion may not apply to you. The duration of any implied warranty with respect to this Montigo Gas Appliance is limited to the duration of the foregoing warranty. Some states do not allow limitation on how long an implied warranty lasts, so the above may not apply to you.

Investigation Of Claims Against Warranty

The Companies reserves the right to investigate any and all claims against this Warranty and to decide upon method of settlement.

The Companies Are Not Responsible For Work Done Without Written Consent

The Companies shall in no event be responsible for any warranty work done without first obtaining The Companies written consent.

Dealers Have No Authority To Alter This Warranty

The Companies employees and dealers have no authority to make any warranties nor to authorize any remedies in addition to or inconsistent with those stated above.

How To Register A Claim Against Warranty

In order for any claim under this Warranty to be valid, The Companies must be notified of the claimed defect in writing or by telephone, as soon as reasonably possible after the defect is discovered. Claims against this Warranty in writing should include the date of installation, and a description of the defect.

Other Rights

This Warranty gives you specific legal rights, and you may also have other rights which vary from state to state.

NOTE: *The Companies* as stated above refer to - Canadian Heating Products Inc. and/or Montigo Del Ray Corp.

Canadian Heating Products Inc. and/or Montigo DelRay Corp. reserves the right to make changes at any time, without notice, in design, materials, specifications, prices and also to discontinue colors, styles and products.

Appendix

Appendix C: State of Massachusetts

Amendment

(Gas Fireplace / Equipment sold in the State of Massachusetts)
5.08: Modifications to NFPA-54, Chapter 10

(1) Revise NFPA-54 section 10.5.4.2 by adding a second exception as follows:
Existing chimneys shall be permitted to have their use continued when a gas conversion burner is installed, and shall be equipped with a manually reset device that will automatically shut off the gas to the burner in the event of a sustained back-draft.

(2) Revise 10.8.3 by adding the following additional requirements:
(a) For all side wall horizontally vented gas fueled equipment installed in every dwelling, building or structure used in whole or in part for residential purposes, including those owned or operated by the Commonwealth and where the side wall exhaust vent termination is less than seven (7) feet above finished grade in the area of the venting, including but not limited to decks and porches, the following requirements shall be satisfied:

1. INSTALLATION OF CARBON MONOXIDE DETECTORS. At the time of installation of the side wall horizontal vented gas fueled equipment, the installing plumber or gas fitter shall observe that a hard wired carbon monoxide detector with an alarm and battery back-up is installed on the floor level where the gas equipment is to be installed. In addition, the installing plumber or gas fitter shall observe that a battery operated or hard wired carbon monoxide detector with an alarm is installed on each additional level of the dwelling, building or structure served by the side wall horizontal vented gas fueled equipment. It shall be the responsibility of the property owner to secure the services of qualified licensed professionals for the installation of hard wired carbon monoxide detectors
a. In the event that the side wall horizontally vented gas fueled equipment is installed in a crawl space or an attic, the hard wired carbon monoxide detector with alarm and battery back-up may be installed on the next adjacent floor level.
b. In the event that the requirements of this subdivision can not be met at the time of completion of installation, the owner shall have a period of thirty (30) days to comply with the above requirements; provided, however, that during said thirty (30) day period, a battery operated carbon monoxide detector with an alarm shall be installed.

2. APPROVED CARBON MONOXIDE DETECTORS. Each carbon monoxide detector as required in accordance with the above provisions shall comply with NFPA 720 and be ANSI/UL 2034 listed and IAS certified.

3. SIGNAGE. A metal or plastic identification plate shall be permanently mounted to the exterior of the building at a minimum height of eight (8) feet above grade directly in line with the exhaust vent terminal for the horizontally vented gas fueled heating appliance or equipment. The sign shall read, in print size no less than one-half (1/2) inch in size, “GAS VENT DIRECTLY BELOW. KEEP CLEAR OF ALL OBSTRUCTIONS”.

4. INSPECTION. The state or local gas inspector of the side wall horizontally vented gas fueled equipment shall not approve the installation unless, upon inspection, the inspector observes carbon monoxide detectors and signage installed in accordance with the provisions of 248 CMR 5.08(2)(a)1 through 4.
(b) EXEMPTIONS: The following equipment is exempt from 248 CMR 5.08(2)(a)1 through 4:

1. The equipment listed in Chapter 10 entitled “Equipment Not Required To Be Vented” in the most current edition of NFPA 54 as adopted by the Board; and
2. Product Approved side wall horizontally vented gas fueled equipment installed in a room or structure separate from the dwelling, building or structure used in whole or in part for residential purposes.

(c) MANUFACTURER REQUIREMENTS - GAS EQUIPMENT VENTING SYSTEM PROVIDED. When the manufacturer of Product Approved side wall horizontally vented gas equipment provides a venting system design or venting system components with the equipment, the instructions provided by the manufacturer for installation of the equipment and the venting system shall include:
1. Detailed instructions for the installation of the venting system design or the venting system components; and
2. A complete parts list for the venting system design or venting system.

(d) MANUFACTURER REQUIREMENTS - GAS EQUIPMENT VENTING SYSTEM NOT PROVIDED. When the manufacturer of a Product Approved side wall horizontally vented gas fueled equipment does not provide the parts for venting the flue gases, but identifies “special venting systems”, the following requirements shall be satisfied by the manufacturer:
1. The referenced “special venting system” instructions shall be included with the appliance or equipment installation instructions; and

2. The “special venting systems” shall be Product Approved by the Board, and the instructions for that system shall include a parts list and detailed installation instructions.
(e) A copy of all installation instructions for all Product Approved side wall horizontally vented gas fueled equipment, all venting instructions, all parts lists for venting instructions, and/or all venting design instructions shall remain with the appliance or equipment at the completion of the installation.

(3) After NFPA-54 section 10.10.4.2 add a new section 10.10.4.3 as follows:
When more than four gas appliances are to be vented through a common gas vent or common horizontal vent manifold, a plan of the proposed vent installation shall be submitted to the Inspector and the serving gas supplier for review and approval.

Extraction from: Massachusets Rules and Regulations
5.00: Amendments To 2002 Edition Of ANSI Z223.1-NFPA-54

MONTIGO®
the art of fireplaces

R520 - R620
Single Sided Gas Fireplace

Ferndale, Washington
TF: 1.800.789.6236
FX: 1.866.3000.0927

Langley, British Columbia
TF: 1.800.378.3115
FX: 1.604.607.6462

XG0771 -040513.4