MONTIGO

D38DVM

INSTALLING AND OPERATING YOUR MONTIGO

GAS-BURNING GRAVITY DIRECT VENT WALL FURNACE

Please leave this manual with the owner

CHECK LOCAL CODES PRIOR TO INSTALLATION

FOR YOUR SAFETY

WHAT TO DO IF YOU SMELL GAS:

- **Do not try to light any appliance.**
- **Do not touch any electrical switch; do not use any phone in your building.**
- **Immediately call your gas supplier from a neighbor's phone. Follow the gas supplier's instructions.**
- **If you cannot reach your gas supplier, call the fire department.**

FOR YOUR SAFETY:

Do not store or use gasoline or other flammable vapors and liquids in the vicinity of this or any other appliance.

WARNING:

Improper installation, adjustment, alteration, service or maintenance can cause injury or property damage. Refer to this manual. For assistance or additional information consult a qualified installer, service agency or the gas supplier.

READ INSTRUCTIONS CAREFULLY BEFORE INSTALLING

CANADIAN GAS ASSOCIATION ®APPROVED

MODEL #	OUTLET
☐ D38DVM	☐ TV ☐ RV

DESIGN AMERICAN GAS ASSOCIATION CERTIFIED

Canadian Heating Products Inc.
Surrey, BC V3W 2V6

Montigo Del Ray Corp.
Ferndale, WA 98248

12/96

INTRODUCTION

The **D38DVM** is rated at 28,000 BTUH. (8.2 Kilowatts) for Natural Gas & 28,000 BTUs (8.2 Kilowatts) for Propane gas.

The Montigo warranty will be voided by, and **Montigo** disclaims any responsibility for, the following actions:

- Modification of the fireplace and/or components including Direct-Vent assembly or glass doors.
- Use of any component part not manufactured or approved by Montigo in combination with this Montigo fireplace system.
- Installation other than as instructed in this manual.

Consult your local Gas Inspection Branch about the particular requirements concerning installation of factory-built gas fireplaces. **Installation & repairs should be done by a qualified contractor, and installation must conform with local codes or, in the absence of local codes, with the National Fuel Gas Code, ANSI Z223.1-1988 and or CAN/CGA B-149.1 and .2. When the unit employs the OPTIONAL Fan Kit it must be electrically grounded in accordance with local codes or, in the absence of local codes, with the National Electrical Code, ANSI/NFPA 70-1987and or CSA C22.1 Canadian Electrical Code Part 1.**

CAUTIONS

*** Due to its high operating temperatures, the appliance should be located out of traffic & away from furniture and draperies.**

*** Children and adults should be alerted to the hazards of the high surface temperature, which could cause burns or clothing ignition.**

*** Young children should be carefully supervised when they are in the same room as the appliance.**

*** Clothing or other flammable materials should not be placed on or near the appliance.**

SELECTING YOUR FIREPLACE LOCATION

The fireplace may be installed in any location that is free of air condition ducts, electrical wiring and plumbing. Safety, as well as efficiency of operation, must be considered when selecting the fireplace location. Try to select a location that does not interfere with room traffic, has adequate ventilation, and offers an accessible pathway for Direct Vent & Combustion Air Kit installation.

The fireplace dimensions are shown below:

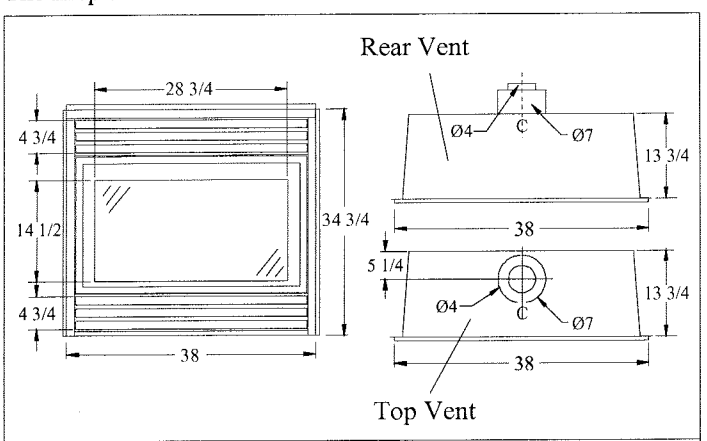

FIGURE 1. FIREPLACE DIMENSIONS

INSTALLING THE FIREPLACE SHELL

The **D38DVM** clearances to combustible materials are 0" back, 1 1/2" sides, 0" floor and 6" top (Rear Vent model) or 14" top (Top Vent model). The **D38DVM** must not be installed any closer than 3 inches to any unprotected combustible wall perpendicular to the fireplace opening.
Minimum 14" required to framing above the fireplace when a 90 elbow is used (See figure 8).

WARNING: When this appliance is installed directly on carpeting, tile or other combustible materials other than wood flooring, the appliance shall be installed on a metal or wood panel extending the full width and depth of the appliance.

The D38DVM may be installed in a bedroom and/or bathroom.

For protection against freezing temperatures, it is recommended that outer walls of the chase be insulated with a vapour barrier. This will reduce the possibility of a cold-air convection current on the fireplace.

The D38DVM has two possible venting methods:

1. Direct Vent - Top Vent
2. Direct Vent - Rear Vent

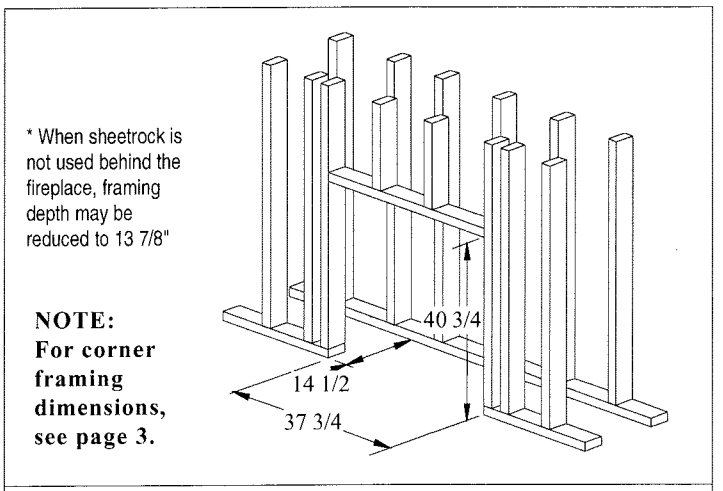

FIGURE 2. FRAMING DIMENSIONS

INSTALLING THE GAS LINE

The gas line must be installed before finishing the D38DVM Fireplace. **Natural Gas** requires a minimum inlet gas supply pressure of 5.5" W.C. & a manifold pressure of 3.5" W.C. **Propane Gas** requires a minimum inlet gas supply pressure of 11" W.C. & a manifold pressure of 10.5" W.C. The gas control valve (which is mounted behind the removable brass trims at the bottom of the unit), is connected to the gas line through the access opening which is provided on the left side. Provide a 1/8" N.P.T. plugged tapping, accesseable for test gauge connection immediately up stream of the gas supply connection to the fireplace. The maximum inlet gas supply pressure is 1/2 psig (3.5 kPa).

The appliance and its individual shutoff valve must be disconnected from the gas supply piping system during any pressure testing of that system at test pressures in excess of 1/2 psig (3.5 kPa).

The appliance must be isolated from the gas supply piping system by closing its individual manual shutoff valve during any pressure testing of the gas supply piping system at test pressures equal to or less than 1/2 psig (3.5 kPa).

FRAMING DIMENSIONS ARE SHOWN BELOW:

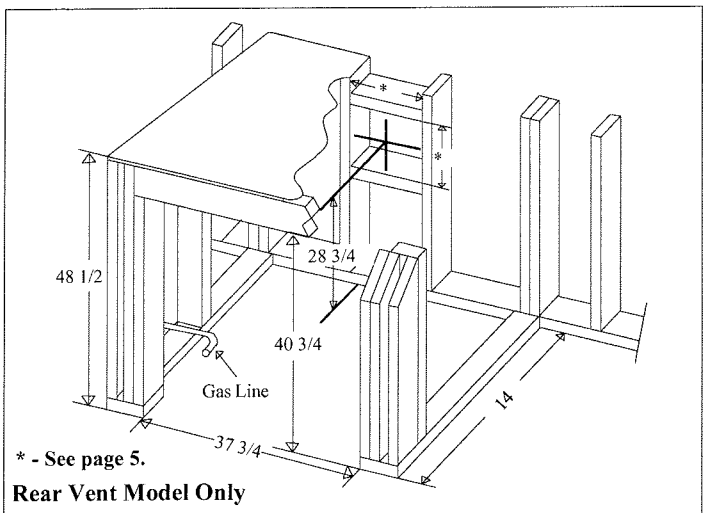

FIGURE 3. FRAMING OVER FIREPLACE

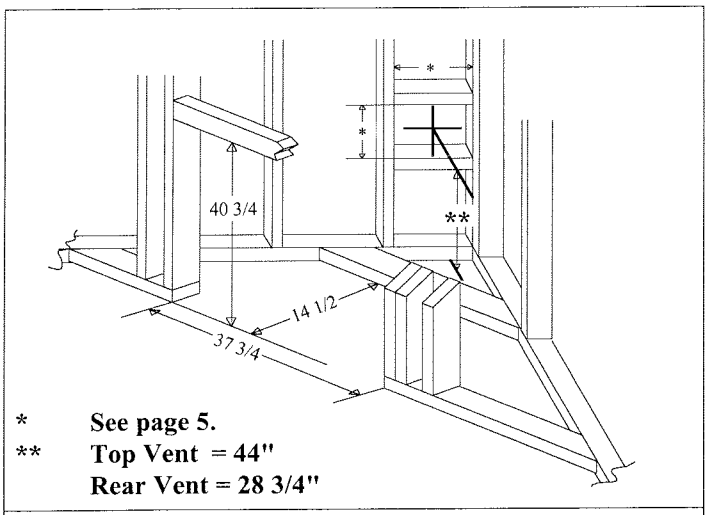

FIGURE 4. CORNER FRAMING DIMENSIONS

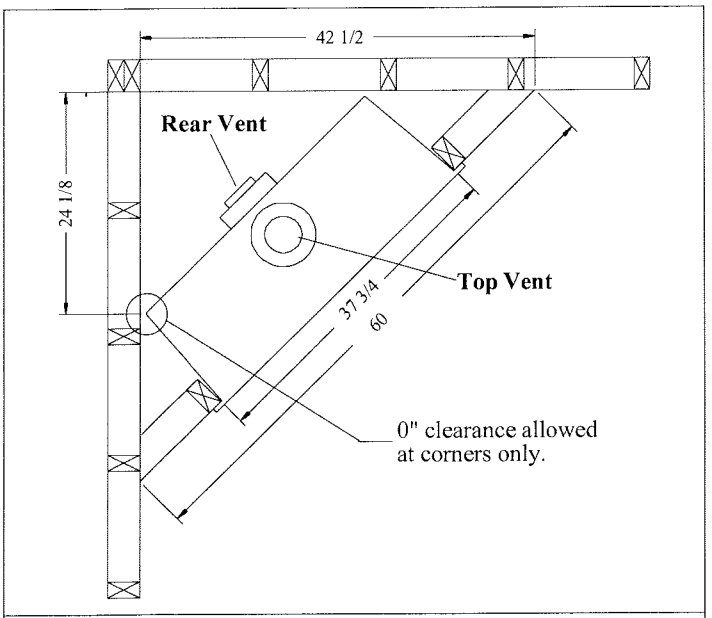

FIGURE 5. CORNER FRAMING DIMENSIONS

WIRING SCHEMATIC FOR OPTIONAL FANS

When the unit employs the OPTIONAL Fan Kit it must be electrically grounded in accordance with local codes or, in the absence of local codes, with the National Electrical Code, ANSI/NFPA 70-1987and or CSA C22.1 Canadian Electrical Code Part 1.

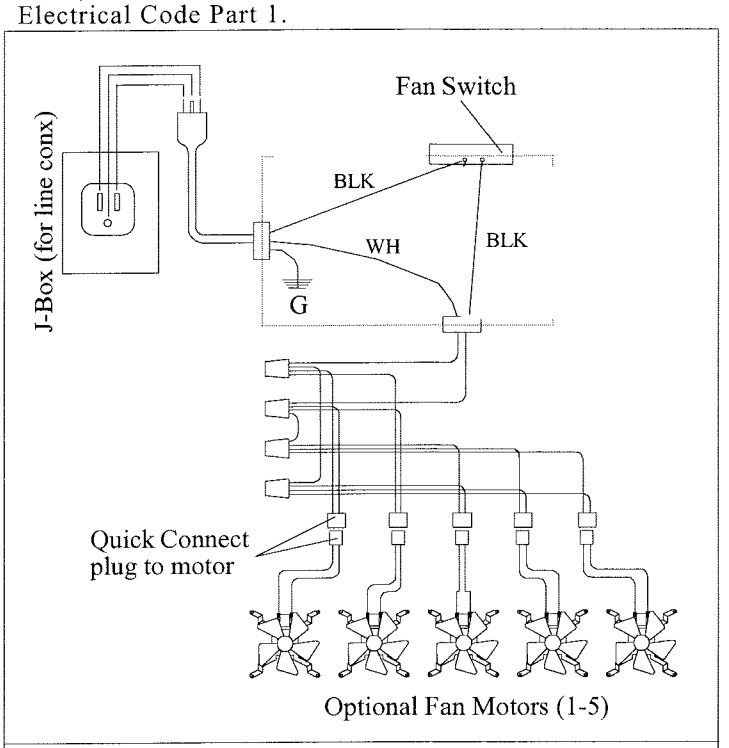

COMPONENTS

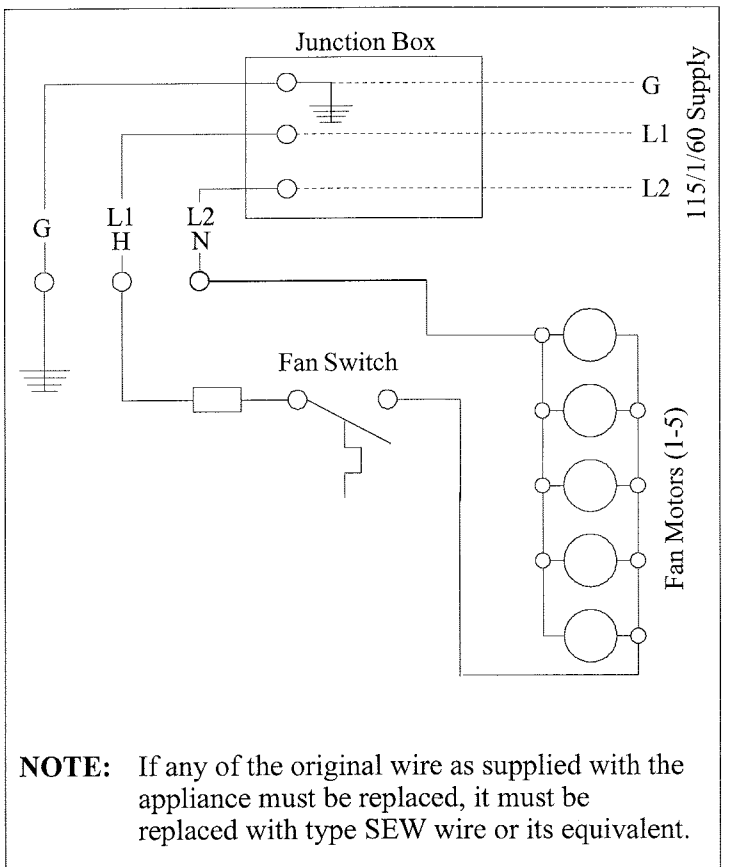

NOTE: If any of the original wire as supplied with the appliance must be replaced, it must be replaced with type SEW wire or its equivalent.

SCHEMATIC DIAGRAM

REMOVAL OF THE INSERT

NOTE: You may remove the insert to protect it from theft and damage during construction.

STEP 1. Remove the two machine screws (1 left & 1 right) at the top of the insert that attach the insert to the shell. *See figure 6 - inset 1.*

STEP 2. Remove the 4" fresh air flex from the collars on the shell. *See figure 6.* **IMPORTANT: Be careful not to damage the fresh air flex during removal or storage.**

STEP 3. Remove the 4 machine screws that hold the venting plate to the insert.

STEP 4. Remove the insert by tipping the top of the insert outward and lifting the tabs past the slots in the bottom of the shell. *See figure 6 - inset 2.*

To re-install the insert simply reverse the steps above. Make sure to store the screws and clamps in a safe place to ensure that they are not lost.

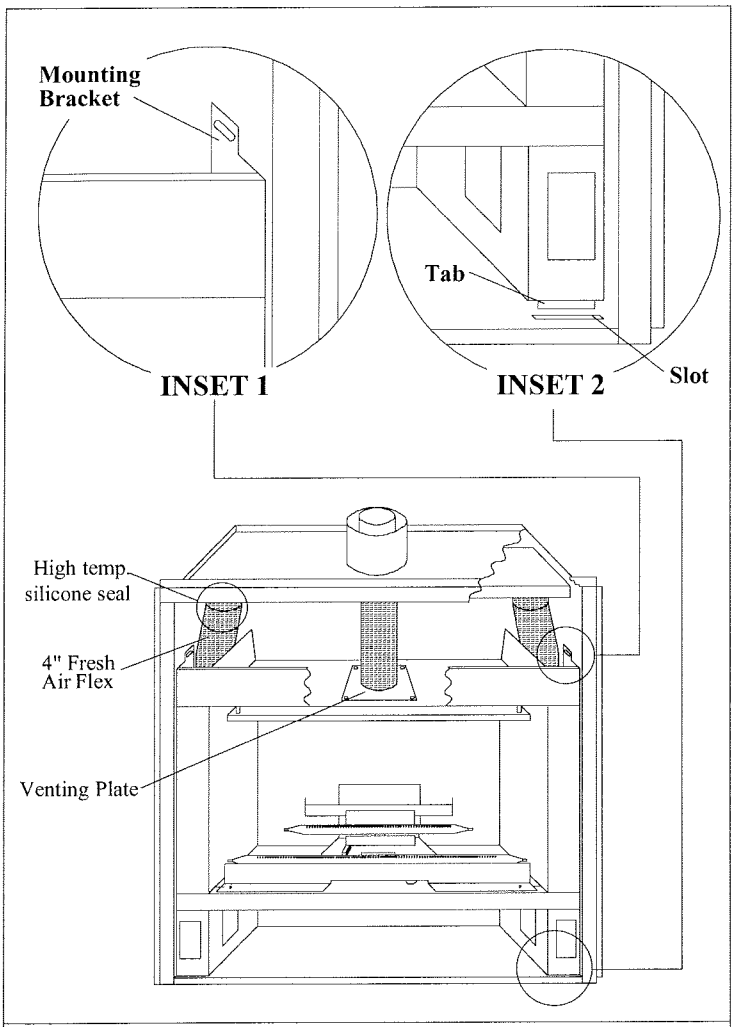

FIGURE 6. ATTACHING FLEX LINERS.

Vent Installation

This section covers the installation of direct venting and terminations.

Installation Requirements

- Montigo 38 Series fireplaces use standard Venting components with:
  4" inner dia. /7" outer dia.
- Minimum **1" clearance to combustibles** required for vent pipes
- Use only *certified Montigo vent components.* (Use of other parts will void the Montigo warranty, and may impede the operation of the fireplace.)
- All joints must be secured with a minimum of two screws per joint
- Vent terminations must not be recessed in walls or siding
- Horizontal runs must be supported by a minimum of two supports per horizontal run. A minimum of one screw on each side of support is also required
- Flex vent sections may be stretched up to 50% of their total length (eg. a 24" section may be stretched to 36")
- Solid vent sections may be cut less than half way from the tapered end

Vent Terminations

Selecting A Termination Location

Choosing your vent termination location will help to determine whether you need to use a top vent or rear vent fireplace. Figure 7, below, shows typical fireplace locations and the venting options they provide.

For a more detailed diagram of allowed termination locations, see **Appendix B.**

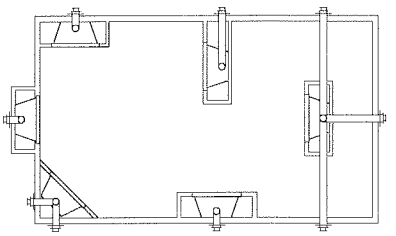

Figure 7. *Fireplace locations and vent terminations.*

- Vent terminations can be very hot. National Standards require that all terminations accessible to the public (below 7 feet from grade level, on balconies, or decks) be installed with a certified Montigo Heat Guard. (Part no. MTKOG)
- Do not obstruct, or attempt to conceal, the vent termination. These actions will affect the operation of the fireplace, and may be hazardous.
- In heavy snow areas, take extra care to prevent snow buildup from obstructing the vent termination.

Installing Terminations with Built-In Frames

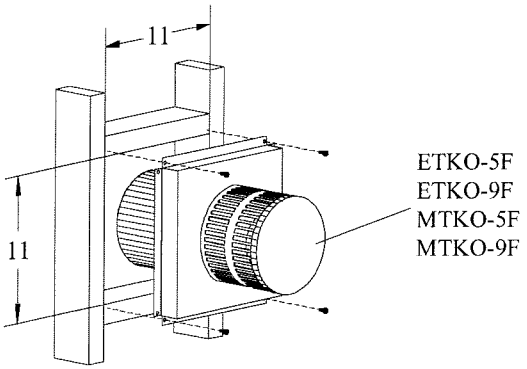

1. Frame the termination opening to 11" x 11".
2. Fasten the termination to the studs using a minimum of 4 screws.

Installing Terminations with MSR Frames

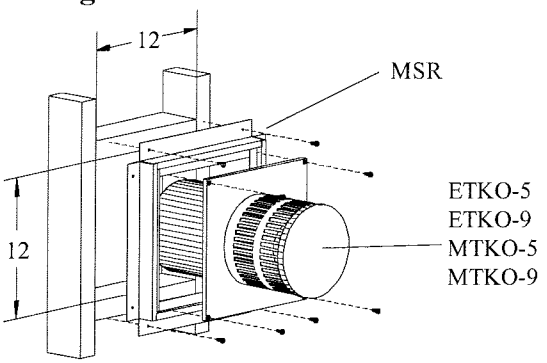

1. Frame the termination opening to 12" x 12".
2. Fasten the termination to the studs using a minimum of 4 screws.

Installing Terminations with MOSR Frames

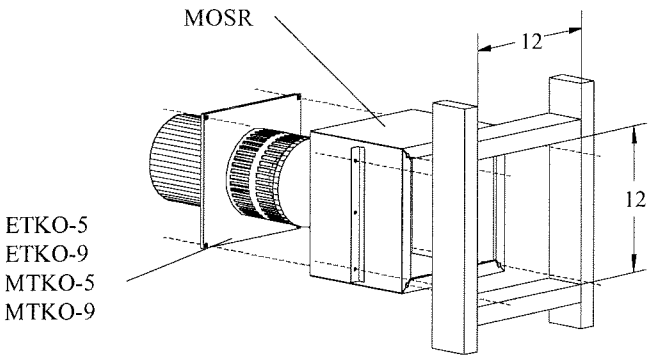

1. Frame the termination opening to 12" x 12".
2. Fasten the MSR frame to the interior side of the studs using a minimum of 4 screws.
3. Insert the termination into the MSR frame as shown here, and attach by screwing through the four pilot holes in the termination.

Installing Flex Terminations

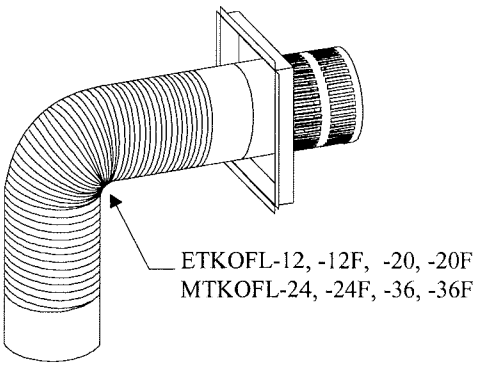

1. Frame the termination opening to the appropriate size:
   ETKOFL-12F, -20F, MTKOFL-24F,-36F 11" x 11"
   ETKOFL-12, -20, MTKOFL-24,-36 12" x 12"
2. Feed the flex section through the framed opening and install in the same fashion as the standard PTKO terminations.

Installing Heat Guards over Terminations

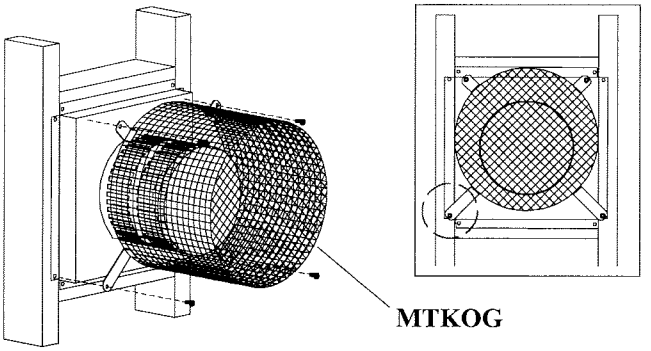

1. Ensure that the two ***long*** mounting brackets are facing the bottom of the termination. (See inset). This will provide more heat protection at the top of the termination, where temperatures are highest.
2. Attach to the faceplate of the termination using four sheet metal screws.

VENTING GRAPH

Venting graph is used for top vent direct vent model only.

How to use the venting graph:

1 Determine the height for the centre of the 7" vent elbow and mark a horizontal line until it intersects with the slanted graph line.

2. From the point of this intersection draw a vertical line to the bottom line of the graph.

3. Select the indicated dimension and position the fireplace in accordance with the same.

Example A:

If the vertical dimension from the floor of the fireplace is 42" the horizontal run to the wall flange of the vent termination must not exceed **24".**

Example B:

If the vertical dimension from the floor of the fireplace is 60" the horizontal run to the wall flange of the vent termination must not exceed **64".**

Example C:

If the vertical dimension from the floor of the fireplace is 72" the horizontal run to the wall flange of the vent mination must not exceed **120". (Maximum allowable horizontal length).**

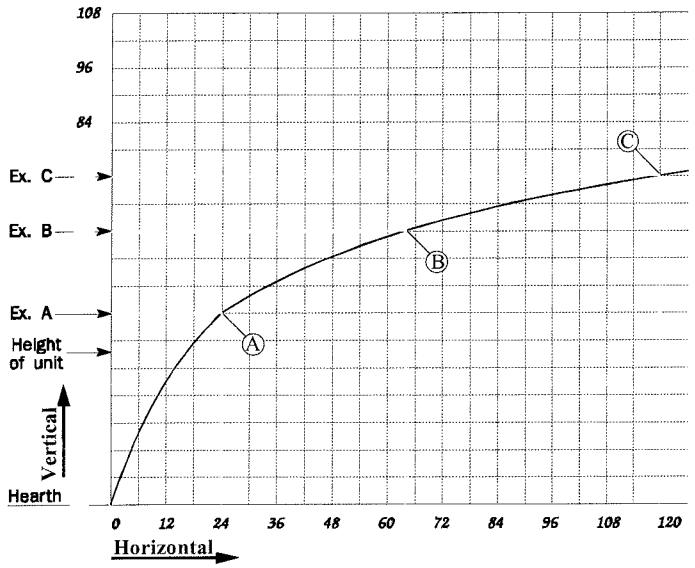

VENTING GRAPH

GENERAL VENT/PIPE INFORMATION

This applaince must not be connected to a chimney flue serving a seperate solid-fuel burning applaince.

1.) All joints must be secured with the minimum of two screws per joint.

2.) Horizontal runs must be supported by a minimum of two supports per horizontal run. A minimum of one screw on each side of support is also required.

3.) Both ends of the vertical sections are slip sections and are made to slide over fireplace outlets and horizontal section inlets.

INSTALLATION OF TOP VENT DV

A complete **38DVM TOP VENT** system may comprise of six individual components: **(see figure 7. on page 5)**

A - Termination	MTKO-5 (5" length) MTKO-9 (9" length)
B - Stucco Kits	MSR (stucco frame) MOSR (stucco can)
C - Solid section & elbow	MIHR-6 (6 ft. length) MIHR-10 (10 ft. length)
D - Flex sections	MFL-1 (1' 6" section) MFL-2 (2' 6" section) MFL-3 (3' 6" section) MFL-4 (4' 6" section)
E - Solid sections	MEXT-1 (1' 6" section) MEXT-2 (2' 6" section) MEXT-3 (3' 6" section) MEXT-4 (4' 6" section)
F - 90 degree elbow	MEL90 (90 deg. elbow)

Example: For our shortest venting configuration use components A, B, and F. **(see Figure 8).**

Example: A 10' section and elbow (MIHR-10) used in conjunction with 3 ft. flex section (MFL-3) will, when extended in a five foot chase, allow for a maximum horizontal run of twelve and one-half feet from the centre of the fireplace to outside wall and a minimum of 7'6" when retracted in opposite direction **(see Figure 9 and 10).**

"D" flex sections and "E" solid sections may be used in conjunction with one another to obtain different possible horizontal length installations. **NOTE:** Flex section must not exceed maximum horizontal length of 3 feet. **(see Figure 11)**

CAUTIONS AND REQUIREMENTS

All vent pipes must maintain a minimum of 1" clearance to combustible materials.

Note: It is imperative for satisfactory operation of the 38DVM fireplace that no venting component be modified in any way. All components have been manufactured to eliminate the need for modification when properly selected and installed.

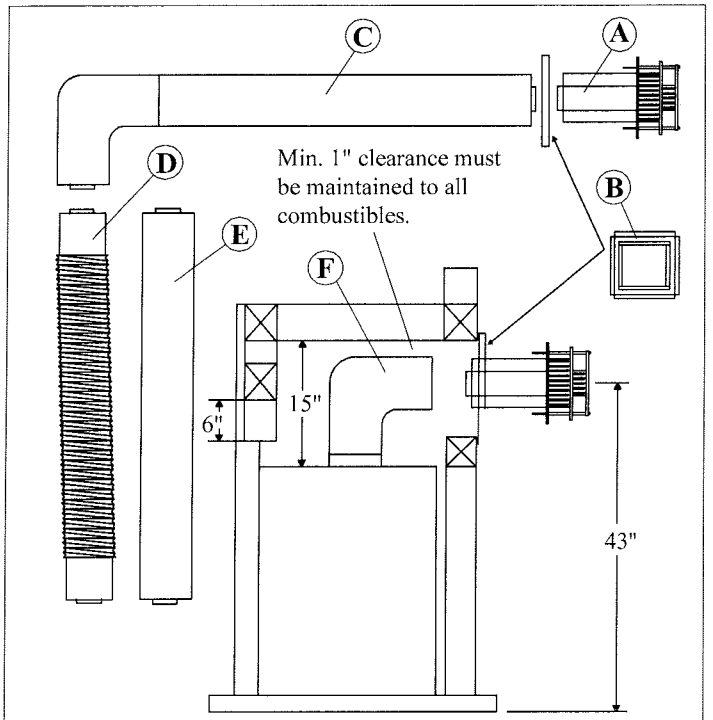

NOTE: Minimum 15" required to framing above the fireplace when a 90°elbow is used

FIGURE 8. TYPICAL INSTALLATIONS.

HORIZONTAL VENTING

All vent pipes must maintain a minimum of 1" clearance to combustible materials.

****NOTE:** All dimension lengths for vertical or horizontal runs are measured from center of the 7" elbow.

(A) Horizontal length (see venting graph)

(B) Vertical length (see venting graph)

Center of 7" elbow to outside wall	10 Ft Section MIHR-10	6 Ft Section MIHR-6
Maximum extended length	12 1/2 Ft.	8 1/2 Ft.
Maximum retracted length	07 1/2 Ft.	3 1/2 Ft.

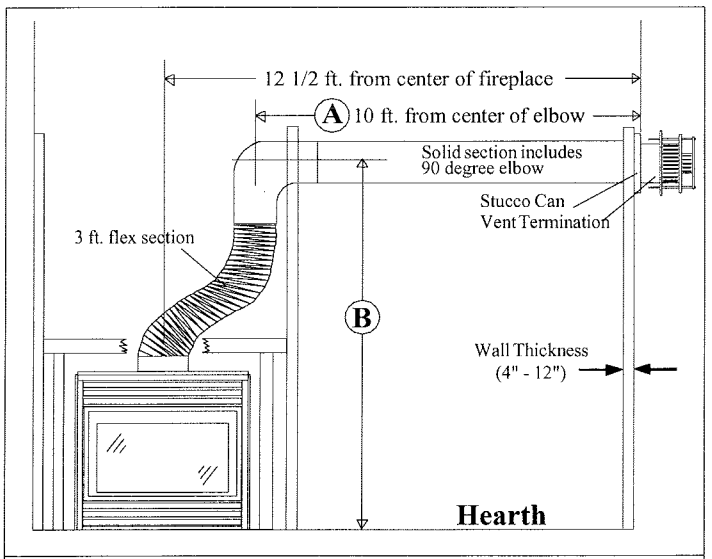

FIGURE 9. EXTENDED 10' SECTION

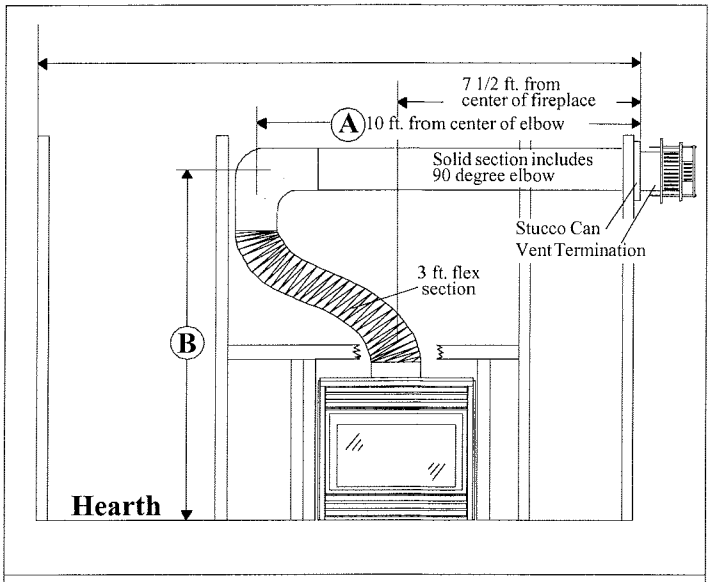

FIGURE 10. RETRACTED 10' SECTION

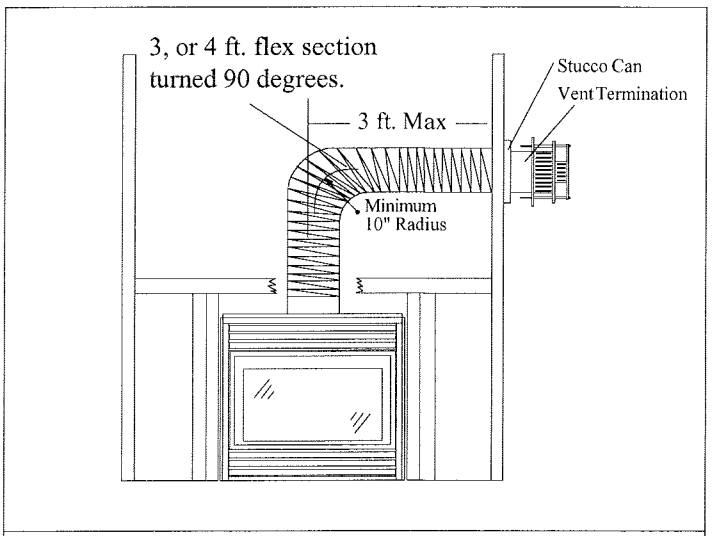

FIGURE 11 HORIZONTAL FLEX INSTALLATION

INSTALLATION OF VERTICAL VENT DV

A complete 38DVM vertical vent installation may comprise of the following components:

A - Termination	MVTK-1
B - Flex sections	MFL-1 (1' 6" section) MFL-2 (2' 6" section) MFL-3 (3' 6" section) MFL-4 (4' 6" section)
C - Solid sections	MEXT-1 (1' section) MEXT-2 (2' section) MEXT-3 (3' section) MEXT-4 (4' section) MEXT-6 (6' Section)
D - Support Ring & Plate	MSPXT-7 (7" Support Plate & Ring)
E - 7" Firestop	FS-7 (7" Firestop)
F - Roof Flashing	MRF-16 (1/12 to 6/12 pitch) MRF-12 (6/12 to 12/12 pitch)

VERTICAL DIRECT VENT TERMINALS

Shall not be installed;

- Less than two feet above the highest point where vent passes through the roof.
- Less than six feet from a mechanical air inlet.
- Less than three feet from a parapet wall.

Offsets;

- A maximum of two offsets with 90 degree bends may be made and shall not exceed total length of 25% of the vertical vent height, when measured center to center of piping.

EXAMPLE: Typical vent installation
(see figure 14) 20' vertical vent
2 - 2' offsets required
25% of 20' = 5' max. offset allowed
this venting system complies to instruction requirements.

- **Maximum vent height is 20 feet above fireplace.**
- **Minimum clearances 1" from vent to all combustible materials must be maintained.**

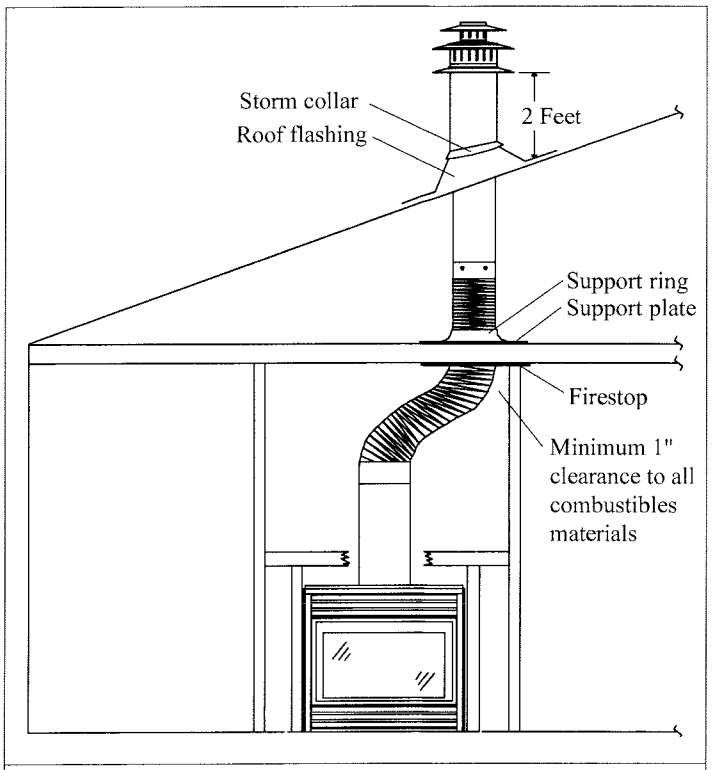

FIGURE 13. VERTICAL VENTING

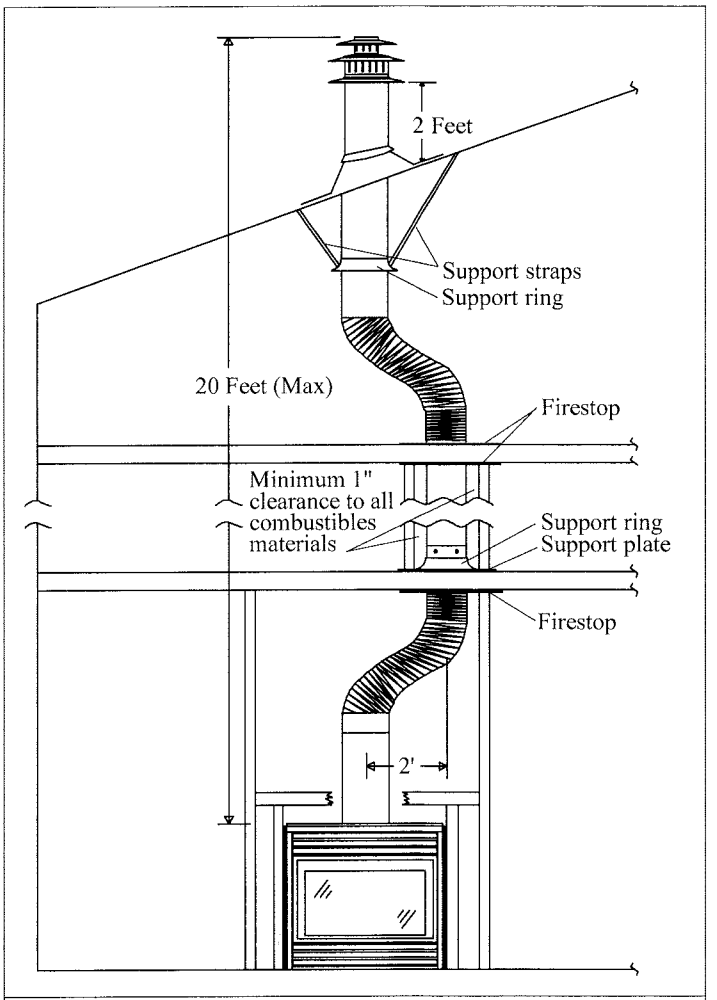

FIGURE 14. VERTICAL VENTING

VENTING OF REAR VENT DV

The **38DVM** has been designed for four possible rear vent installations.

1). Standard 4" or 6" stud walls. For 4" walls use a stucco frame and a 5" termination. For 6" walls use a stucco frame and a 9" termination.

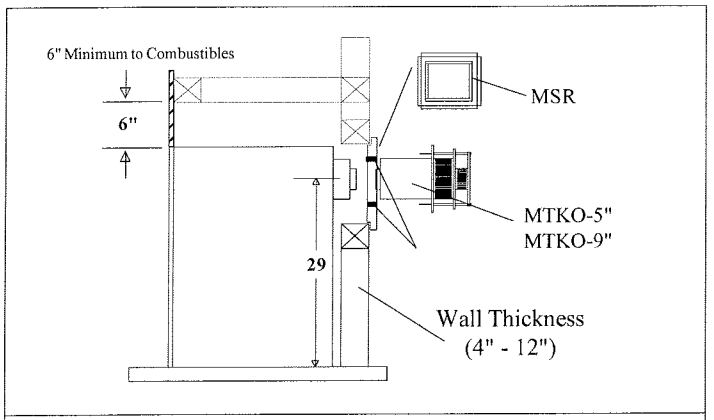

FIGURE 15. STANDARD INSTALLATION

2). Extended vent kit. For extended vent use a stucco frame, 20" extended vent and a termination. **Note:** 20" kit may be cut to desired length but must never exceed 20".

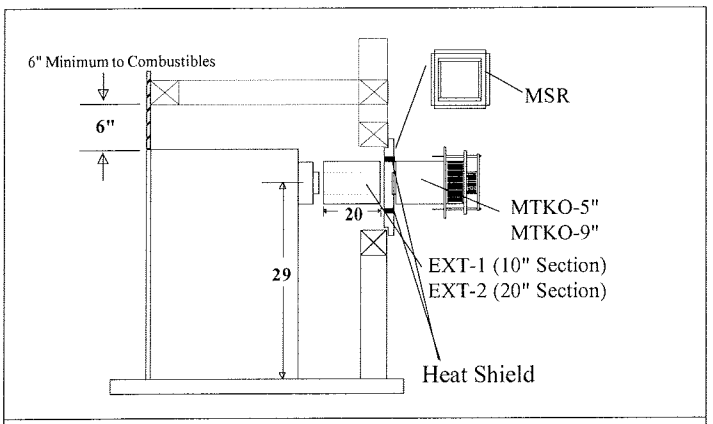

FIGURE 16. EXTENDED INSTALLATION

CAUTIONS AND REQUIREMENTS

All vent pipes must maintain a minimum of 1" clearance to combustible materials.

Note: It is imperative for satisfactory operation of the 38DVM fireplace that no venting component be modified in any way. All components have been manufactured to eliminate the need for modification when properly selected and installed.

3). 45° corner kit. Use a 45 °elbow, stucco frame and a 5" termination.

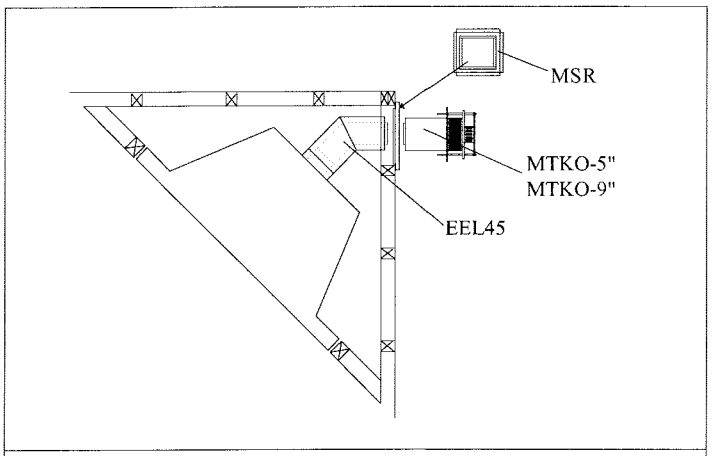

FIGURE 17A. CORNER INSTALLATION

4). Corner installation of 45 °or less: Use a Flexible section (available in ETKFL 12", or 18") a stucco frame and termination. Flex may be turned to obtain desired degree of angle required but must not exceed 45 °. See diagram below:

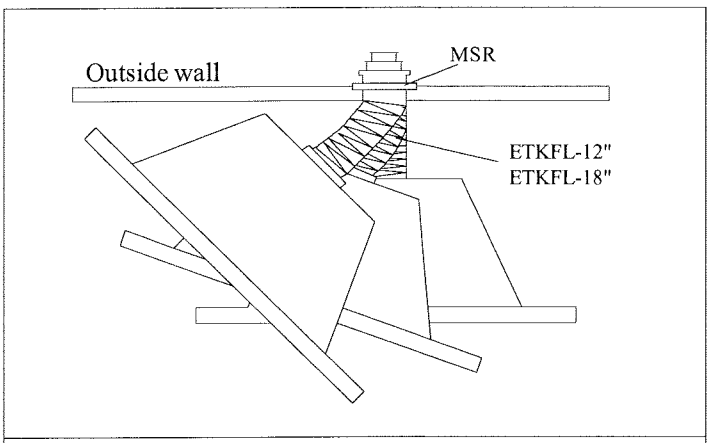

FIGURE 17B. FLEXIBLE INSTALLATION

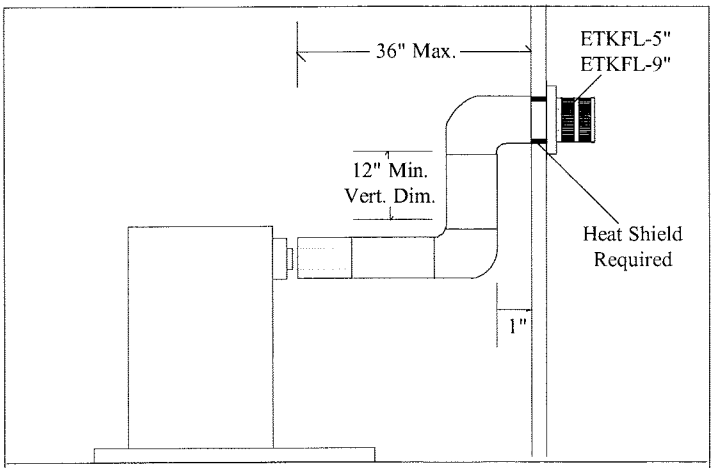

FIGURE 17C. VERTICAL OFFSET

FIREPLACE MANTEL AND FACING

Combustible mantels and mouldings may be safely installed over the top and on the front of the fireplace provided that they do not project beyond shaded area shown in **figure 18A**. Side wall clearances are 3". Combustible surrounds may be installed with 3" clearance to the side of the fireplace as shown in **figure 18B**.

FIREPLACE FACING

When selecting the finish material for your fireplace, it is important to remember the following: **BRASS TRIMS MUST NOT BE OBSTRUCTED IN ANY WAY - to do so restricts the air supply for the control compartments and heat exchanger it also prevents access for servicing controls.**

The face of the fireplace may be painted to match the room decor, provided you use a heat-resistant paint. Decorative facing must not extend past the fireplace opening at all, because it will interfere with the access to retainers for removal of glass door.

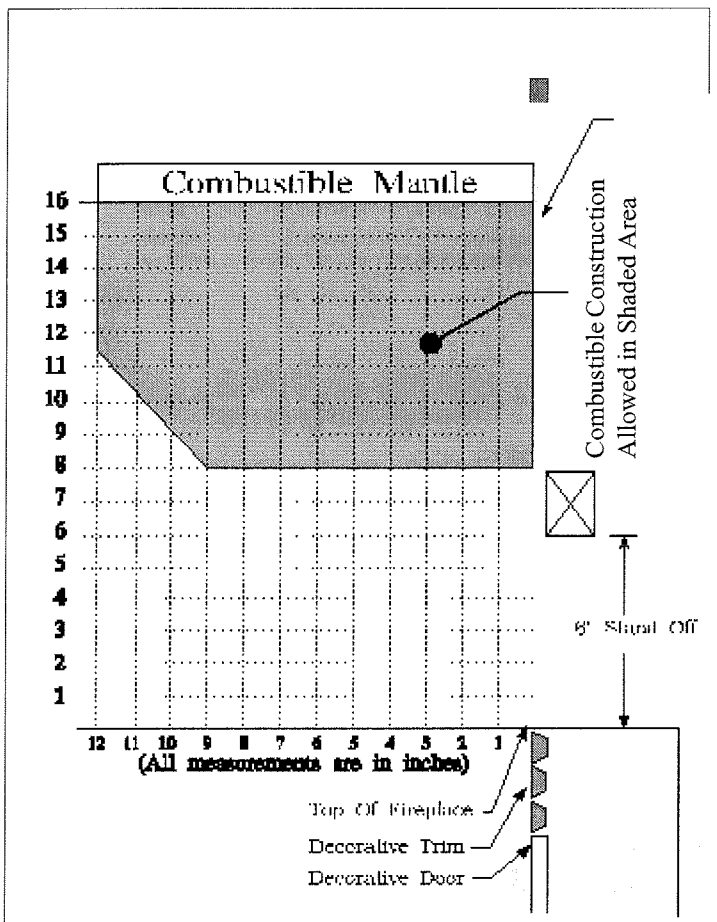

FIGURE 18. COMBUSTIBLE MANTLES & FACINGS

MANTELS & SURROUNDS

NOTE: National Canadian Gas Association mantel test requirements are for fire hazard prevention to combustible materials.

New technology, to meet consumer and government demands for the wise use of energy, has prompted us to manufacture many models of fireplaces which are hot, fuel and energy efficient.

Please be aware; temperatures over the mantel will rise above normal room temperature and walls above fireplace may be hot to touch.

We recommend careful consideration be given to the effects of elevated mantel temperatures which may be in excess of product design, for example: candles, plastic or pictures. This can cause melting, deformation, discoloration or premature failure of T.V. and radio components.

Painting: Special care is recommended by the Master Painters and Decorators Association, when painting the fireplace surrounds, to select and apply a quality Alkyd sealer prior to the applying of latex paints. This is to prevent leaching of water from evaporation and causing a brownish staining effect to paint over coats.

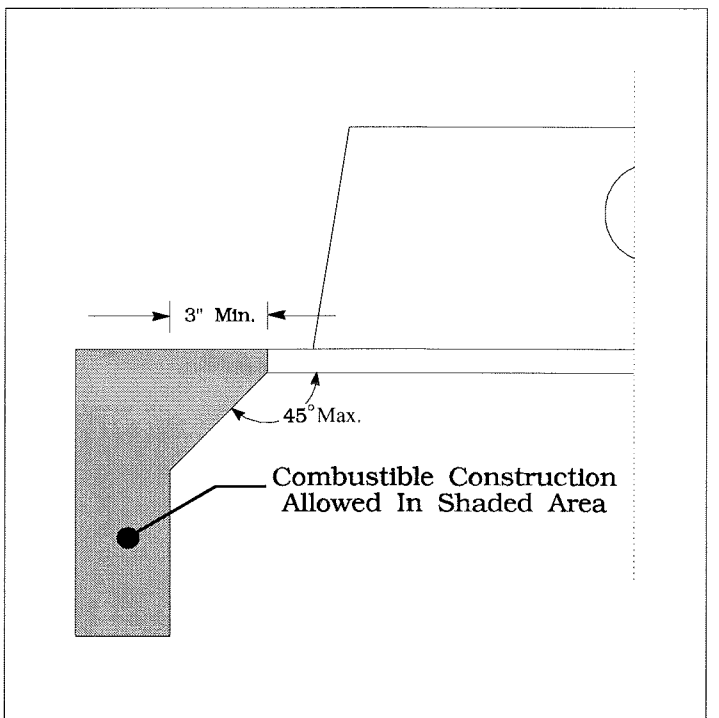

FIGURE 18B. COMBUSTIBLE SURROUNDS

INSTALLING THE GLASS DOOR

To install the glass door simply attach using 10 machine screws into the pilot holes on the 38DVM front. **Ensure that a good seal is maintained. (See figure 19A)**

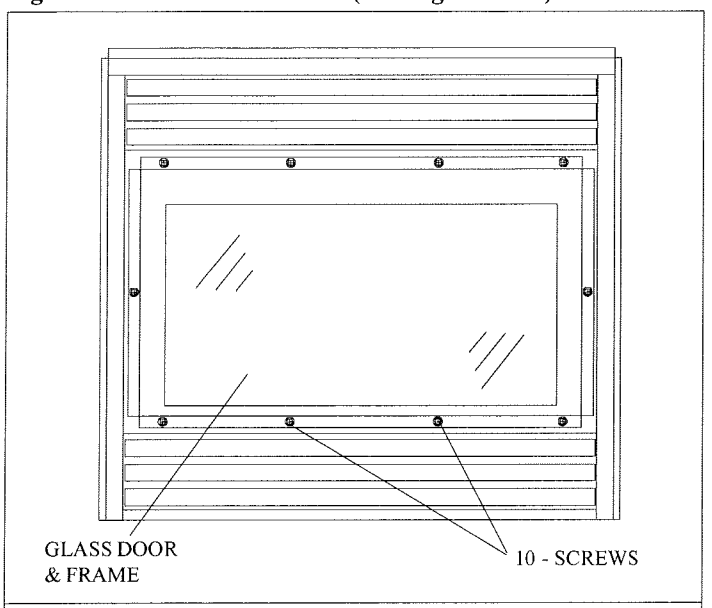

FIGURE 19A. INSTALLING GLASS DOOR

The door frame surround is attached to the fireplace with magnets that are located on the back of the frame. The magnets will hold the frame in place by simply aligning the frame to the outside of the door. **(See figure 19B)**

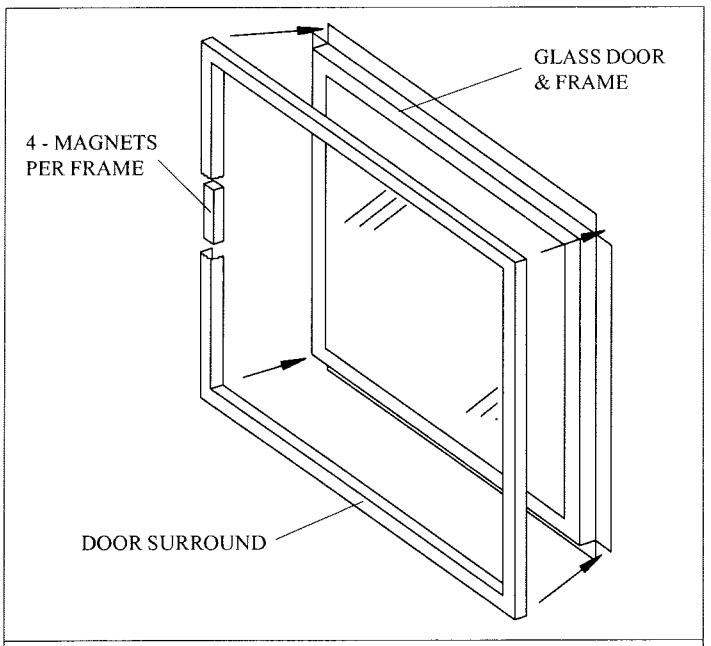

FIGURE 19B. INSTALLING DOOR SURROUND

INSTALLING THE REMOTE SWITCH

The **38DVM** is equipped with a remote-operated valve, located behind the removable brass grille, to the right of the gas control valve (refer to figure 20.) The valve is pre-wired and completely self contained to generate its own power **DO NOT** connect any external power to it. **Note:** The switch location must not exceed 30' from fireplace.

INSTALLING D38DVM LOG SET

The **D38DVM** is supplied with four soft fibre ember logs. Two bottom big logs are factory mounted and cannot be moved. Two top logs are also mounted by factory but may shift during shipping. If logs shift place as indicated in Figure 20A below. Ember material is supplied in 6 oz bag, place along front of burner.

WARNING: FAILURE TO INSTALL LOGS AS PER INSTRUCTIONS WILL RESULT IN EXCESSIVE SOOTING

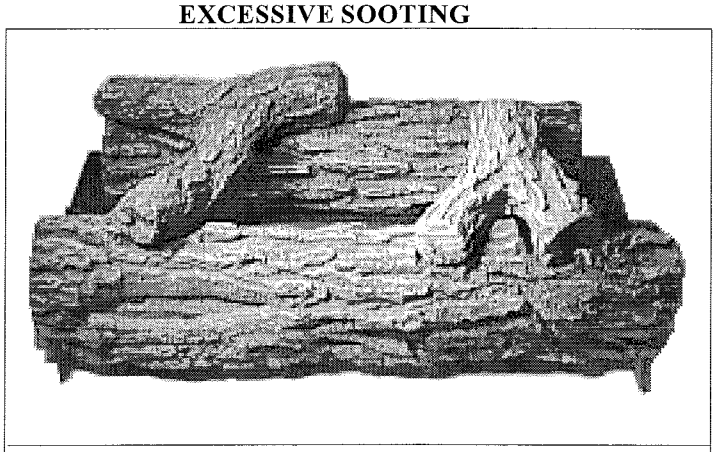

FIGURE 20A. LOG INSTALLATION

It is extremely important that you <u>do not</u> cover the **<u>Carry Over Port</u>** with embers. **Doing so may cause delayed ignition of the burner.** Embers may be placed in the burner tray and over the burner head. Keep the burner ports clear as much as possible as this will allow for the best "Glow" of the embers. See the illustration below for details.

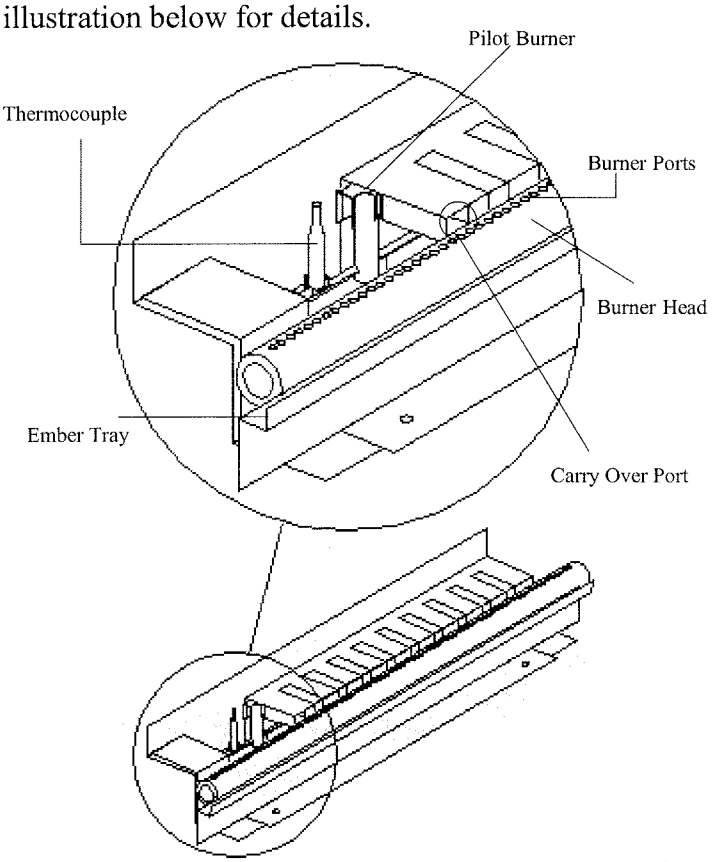

GAS CONTROL VALVE

See LIGHTING INSTRUCTIONS on page 12.

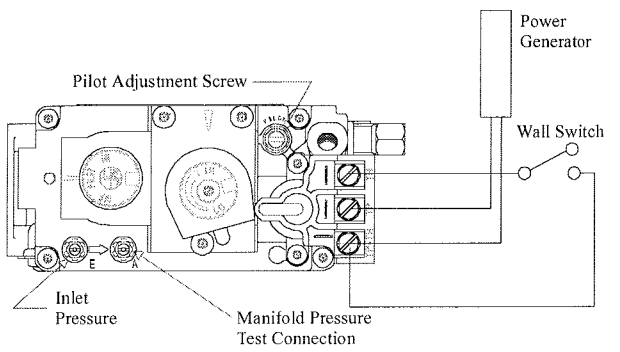

FIGURE 20 SIT GAS VALVE

PILOT BURNER ADJUSTMENT

1. Remove Pilot Adjustment Cap. (see figure 20)
2. Adjust pilot key to provide properly sized flame. **See Figure 21 for properly sized flame.**
3. Replace pilot adjustment cap.
4. Leak test with a soap solution after installing or servicing with main burner on. Coat pipe and tubing joints, gasket etc. with soap solution. Bubbles indicate leaks. Tighten any areas where the bubbles appear until the bubbling stops completely.

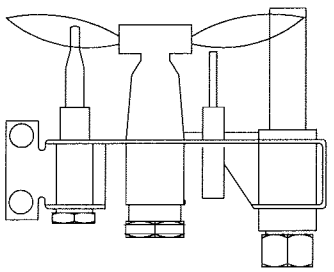

FIGURE 21. PILOT BURNER ADJUSTMENT

MAINTENANCE

- Have the fireplace installation inspected yearly, including a visual check of the vent system, the burner and the pilot flame. For your convenience a 1/8" manifold pressure tap is supplied on the gas valve for a test gauge connection. See Figure 6.
- For **Natural Gas** this appliance requires a minimum inlet pressure of 5.5" W.C. and a manifold pressure of 3.5" W.C.
- For **Propane Gas** this appliance requires a minimum inlet pressure of 11" W.C. and a manifold pressure of 10.5" W.C.
- Always keep the fireplace area clear and free of combustible materials, as well as gasoline and other flammable vapours and liquids.
- Use a vacuum cleaner or whisk broom to keep the control compartment, burner, and firebox free from dust and lint.
- Logs maybe cleaned periodically with soap and water to remove soot and other contamination.
- Do not use this appliance if any part has been under water. Immediately call a qualified service technician to inspect the appliance and to replace any part of the control system and any gas control which has been under water.

CLEANING

When fireplace is first activated some smoking and visible film on the glass may occur, this is a normal condition of heat burning of protective coatings on new metal.

- Products of combustion do deposit a visible film on the glass which must be cleaned periodically. Film can easily be removed by removing the 10 screws which hold the door in place, handling carefully, and cleaning with normal liquid household products.

WARNING: Do not attempt to clean glass when hot. Do not clean glass with abrasive materials as any glass etching may cause premature glass failure.

- Silicone seals on inner door during initial firing will "off gas", leaving a visual deposit of a white substance on combustion chamber walls. This can easily be removed using normal household products.
- Use a vacuum cleaner or whisk broom to keep the control compartment, burner, and firebox free from dust and lint.
- Logs may be cleaned periodically with soap and water to remove soot.

CAUTIONS

*** Fireplace gas control must be in the "OFF" position and pilot and main burners extinguished when cleaning appliance with a vacuum.**
*** Doors and logs can get very hot, handle only when logs are cool.**

TROUBLESHOOTING

The following is a troubleshooting chart of possible problems:

PROBLEM	CORRECTIVE ACTION
Noisy Pilot Flame	Remove pilot adjuster cap, located next to gas shut off valve. Flame is decreased by turning adjustment screw clockwise.
Pilot won't ignite	Disconnect remote wires and try to light pilot. If pilot now works, remote connections are faulty. Check wiring diagram **figure 14.**
Main burner will not light	1. Check wiring **(see figure 14.)** 2. Check wall switch for proper connection.

If your **38DVM** still does not operate correctly, consult your dealer or the manufacturer.

All service and repairs should be performed by a qualified agency.

All spare parts, optional fans (see optional fan instruction guide), and optional trim finishes are available from Canadian Heating Products Inc. or your local dealer.

The **Montigo 38DVM** has a ten-year limited warranty on the firebox, a five-year warranty on the main burner, pilot burner, and cultured oak logs; and a one-year warranty on the gas control valve and glass doors.

FOR YOUR SAFETY READ BEFORE LIGHTING

WARNING: If you do not follow these instructions exactly, a fire or explosion may result causing property damage, personal injury or loss of life

A. This appliance has a pilot which must be lighted using the Piezo igniter. When lighting the pilot, follow these instructions exactly.

B. BEFORE LIGHTING smell all around the appliance area for gas. Be sure to smell next to the floor because some gas is heavier than air and will settle on the floor.

WHAT TO DO IF YOU SMELL GAS
- Do not try to light the appliance.
- Do not touch any electrical switch: do not use any phone in your building.
- Immediately call your gas supplier from a neighbour's phone. Follow the gas suppliers instructions.
- If you cannot reach your gas supplier, call the Fire Department.

C. Use only your hand to push in or turn the gas control knob. Never use tools. If the knob will not push in or turn by hand, don't try to repair it, call a qualified service technician. Force or attempt to repair may result in a fire or explosion.

D. Do not use this appliance if any part has been under water. Immediately call a qualified service technician to inspect the appliance and to replace any part of the control system, and any gas control which has been under water.

LIGHTING INSTRUCTIONS

1. **STOP!** Read the safety information above on this label.
2. Remove lower brass trims.
3. Push in gas control knob and turn clockwise to "OFF."

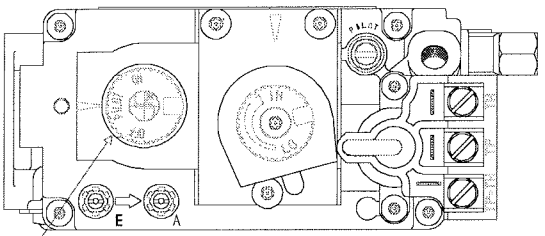

Gas Control Knob
(Shown in "Pilot" postion.)

NOTE: Knob cannot be turned from "PILOT" to "OFF" unless knob is pushed in slightly. Do not force

4. Wait (5) minutes to clear out any gas. If you then smell gas, STOP! Follow "B" in the safety information above on this label. If you don't smell gas, go to the next step.
5. Light pilot burner following steps below.

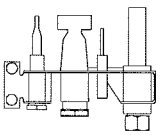

6. Push in knob on gas control and turn counterclockwise to "PILOT."
7. Push in control knob all the way and hold in. Immediately light the pilot using the Piezo igniter (red Button). Continue to hold the control knob in for about (1) minute after the pilot is lit. Release the knob and it will pop back up. Pilot should remain lit. If it goes out repeat steps 3 through 7.
   - If knob does not pop up when released. Stop and immediately call your service technician or gas supplier.
   - If the pilot will not stay lit after several tries, turn the gas control knob to "OFF" and call your service technician or gas supplier.
8. Turn gas control knob counterclockwise to "ON."
9. Replace lower brass trim.
10. Turn on remote switch to ignite fire.

TO TURN OFF GAS TO APPLIANCE

1. Turn off remote switch.
2. Remove lower brass trim.
3. Push in gas control knob slightly and turn clockwise to "Off". Do not force.
4. Replace brass trim.

D38DVM
WALL FURNACE WARRANTY

THE WARRANTY

The Companies warrants the Montigo Wall Furnace to be free from defects in materials and workmanship at the time of manufacture. On the Montigo, there is a ten-year warranty on the firebox and its components, a five-year warranty on the main burner, pilot burner and a one-year warranty on the gas control valve and glass doors.

REMEDY AND EXCLUSIONS

The coverage of this Warranty is limited to all components of the wall furnace manufactured by The Companies.

This Warranty only covers Montigo Wall Furnaces installed in the United States or Canada.

If the components of the Wall Furnace covered by this Warranty are found to be defective within the time frame stated (see The Companies right of investigation outlined below). The Companies will, at its option, replace or repair defective components of the Wall Furnace manufactured by The Companies at no charge, and will also pay for reasonable labour costs incurred in replacing or repairing components. If repair or replacement is not commercially practical, The Companies will, at its option, refund the purchase price of the Montigo Wall Furnace.

This Warranty covers only parts and labour as provided above. In no case shall The Companies be responsible for materials, components, or construction which are not manufactured or supplied by The Companies, or for the labour necessary to install, repair or remove such materials, components or construction. All replacement or repair components will be shipped F.O.B. the nearest The Companies factory.

QUALIFICATIONS TO THE WARRANTY

The Wall Furnace Warranty outlined above is further subject to the following qualifications:

(1) The Wall Furnace must be installed in accordance with The Companies installation instructions and local building codes. The Warranty on this Montigo Wall Furnace covers only the component parts manufactured by The Companies. The use of components manufactured by others with this Montigo Wall Furnace could create serious safety hazards, may result in the denial of certification by recognized national safety agencies, and could be in violation of local building codes. This warranty does not cover any damages occurring from the use of any components not manufactured or supplied by The Companies

(2)The Montigo Wall Furnace must be subjected to normal use. The Wall Furnaces are designed to burn gas only. Burning conventional fireplace fuels such as wood, coal or any other solid fuel will cause damage to the Wall Furnace, will produce excessive temperatures and will result in a fire hazard.

LIMITATIONS ON LIABILITY

It is expressly agreed and understood that The Companies sole obligation, and purchaser's exclusive remedy under this Warranty, under any other warranty, expressed or implied, or in contract, tort or otherwise, shall be limited to replacement, repair, or refund, as specified above.

In no event shall The Companies be responsible for any incidental or consequential damages caused by defects in its products, whether such damage occurs or is discovered before or after replacement or repair, and whether or not such damage is caused by The Companies negligence. Some states do not allow the exclusion or limitation of incidental or consequential damages, so the above limitation or exclusion may not apply to you. The duration of any implied warranty with respect to this Montigo Wall Furnace is limited to the duration of the foregoing warranty. Some states do not allow limitation on how long an implied warranty lasts, so the above may not apply to you.

INVESTIGATION OF CLAIMS AGAINST WARRANTY

The Companies reserves the right to investigate any and all claims against this Warranty and to decide upon method of settlement.

THE COMPANIES ARE NOT RESPONSIBLE FOR WORK DONE WITHOUT WRITTEN CONSENT

The Companies shall in no event be responsible for any warranty work done without first obtaining The Companies written consent.

DEALERS HAVE NO AUTHORITY TO ALTER THIS WARRANTY

The Companies employees and dealers have no authority to make any warranties nor to authorize any remedies in addition to or inconsistent with those stated above.

HOW TO REGISTER A CLAIM AGAINST WARRANTY

In order for any claim under this Warranty to be valid, The Companies must be notified of the claimed defect in writing or by telephone, as soon as reasonably possible after the defect is discovered. Claims against this Warranty in writing should include the date of installation, and a description of the defect.

OTHER RIGHTS

This Warranty gives you specific legal rights, and you may also have other rights which vary from state to state.

NOTE: *The Companies* as stated above refer to - Canadian Heating Products Inc. and/or Montigo Del Ray Corp.

Canadian Heating Products Inc. and/or Montigo DelRay Corp. reserves the right to make changes at any time, without notice, in design, materials, specifications, prices and also to discontinue colors, styles and products.

CANADIAN HEATING PRODUCTS INC.
Surrey, B.C. Canada V3W 2V6

MONTIGO DEL RAY CORP.
Ferndale, WA 98248

MONTIGO D38DVM SPARE PARTS LIST

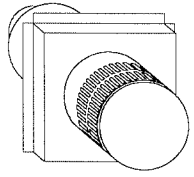

4. MTKO Termination

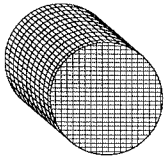

5. MTKOG Heat Guard

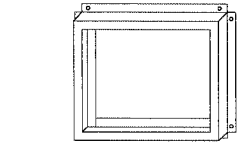

6. Siding or Stucco Frame

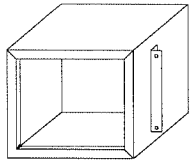

7. Siding or Stucco Can

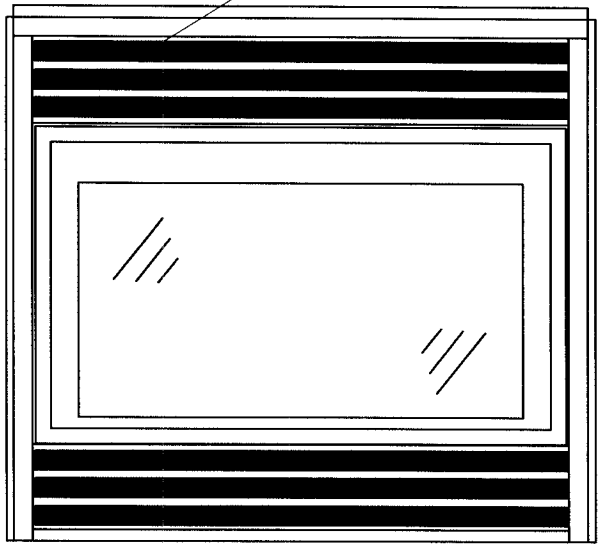

10. Decorative Trims (6 Per Unit)

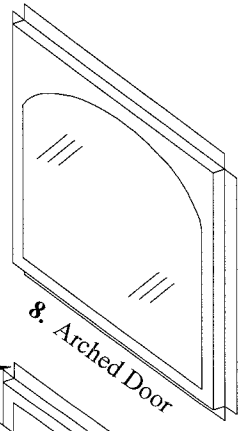

8. Arched Door

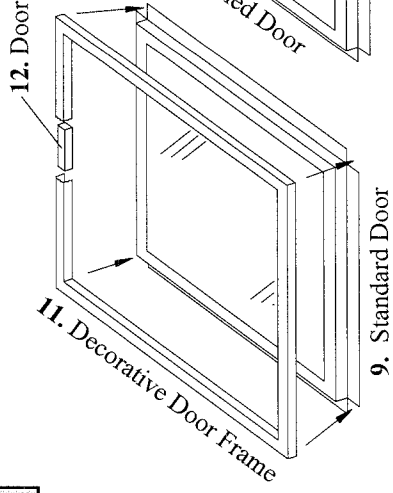

12. Door Frame Magnet

11. Decorative Door Frame

9. Standard Door

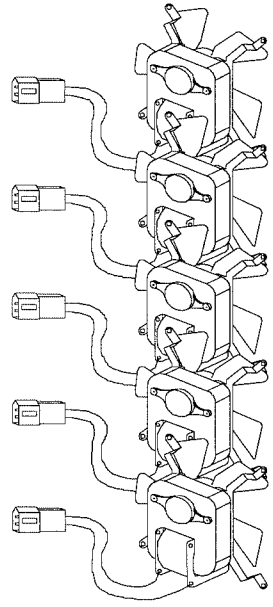

13. Optional Fan Motors

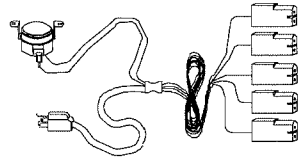

14. Optional Fan Assembly

PART LIST....Page 1	
4. MTKO Termination 5. MTKOG Heat Guard 6. Siding or Stucco Frame 7. Siding or Stucco Can	8. Arched Door 9. Standard Door 10. Decorative Trims (6) 11. Decorative Door Frame 12. Decorative Door Magnet 13. Optional Fan Motors (1-5) 14. Optional Fan Assembly

PART LIST....Page 2		
15. 150F-6-6 3/8 elbow 16. 14FSX-6 flare nut 17. 14SFV-6 connetcor 18. BV-5042-6 ball valve 19. 76743 pilot 5SHL-2 20. 1/4" aluminum tubing 21. 60C-4 standard sleave 22. CHP-005 Bulk union 23. 210P-6 3/8 brass nut	24. 3/8 FW black washer 25. 210P-6 3/8 brass nut 26. 60C-4 standard sleave 27. 61C-4 compression nut 28. 1/4" aluminum tubing 29. 3/8 500025 gas inlet 30. G10 orifice 31. 3/8" Nipple 32. Silicon sponge seal	33. 3/4 I.D. flat washer 34. 1621410 35001250C CH-1 retainer spring 35. 3/4 I.D. flat washer 36. 61C-4 compression nut 37. 48F-6-6 connector 38. 81-4N pilot nut 39. Gas control valve

MONTIGO D38DVM SPARE PARTS LIST

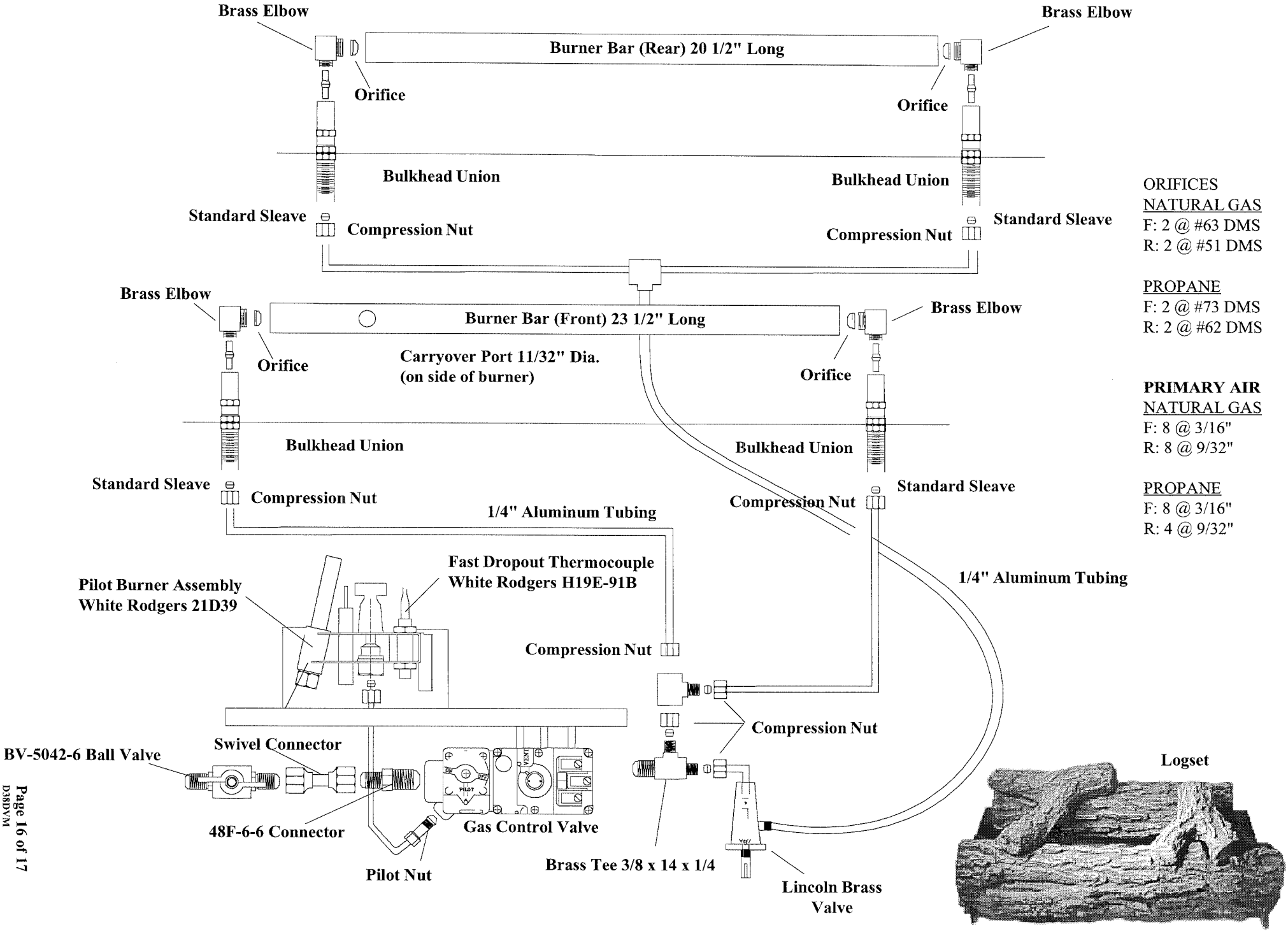

ORIFICES

NATURAL GAS
F: 2 @ #63 DMS
R: 2 @ #51 DMS

PROPANE
F: 2 @ #73 DMS
R: 2 @ #62 DMS

PRIMARY AIR

NATURAL GAS
F: 8 @ 3/16"
R: 8 @ 9/32"

PROPANE
F: 8 @ 3/16"
R: 4 @ 9/32"

APPENDIX A. ALLOWED TERMINATION LOCATIONS