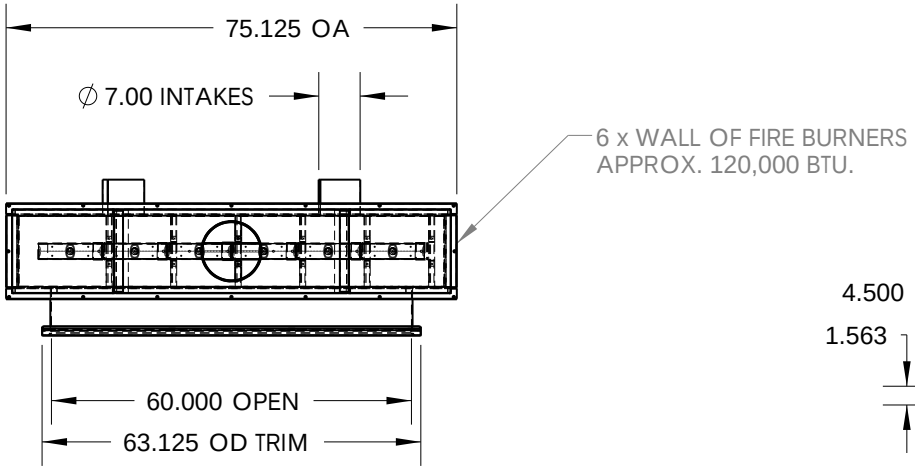

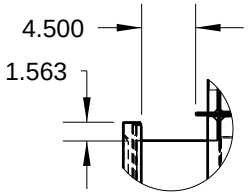

DETAIL A
SCALE 1 : 16

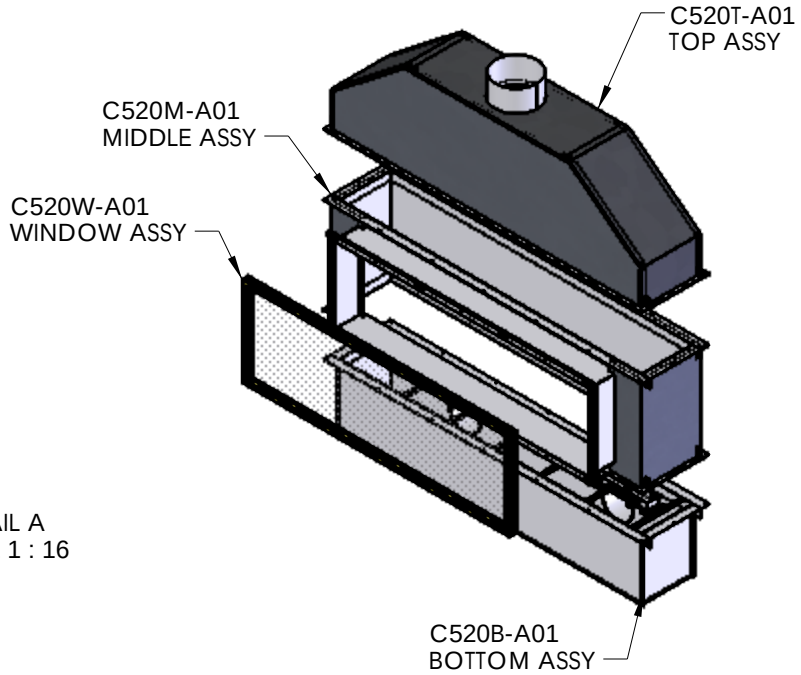

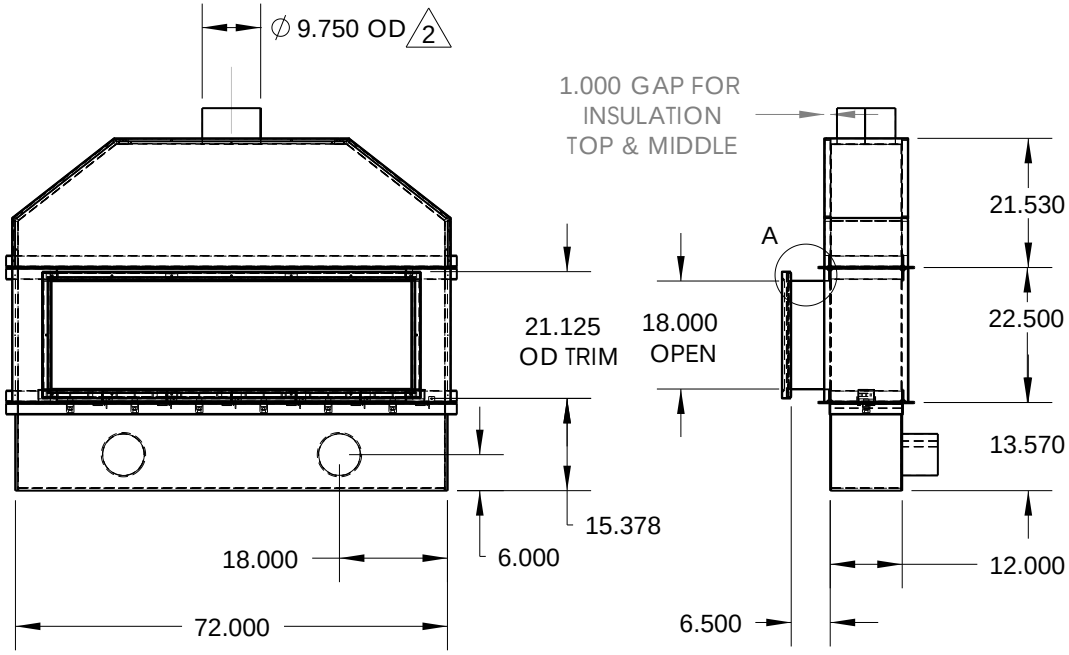

SPECIFICATIONS:
GAS INPUT: 100,000 BTU-
NG ☐ LP ☐
GAS LINE CONNECTION: 1/2 NPT
LEFT ☐ RIGHT ☐
GAS CONTROL: HONEYWELL SMART VALVE
CONTROLER: MONTIGO CV80
POWER SUPPLY: 110 VOLTS 15 AMP
POWER VENT: RS14 ☐ RS16 ☐
RSIF16 ☐ RSIF18 ☐ CUSTOM ☐
BURNER STYLE:

Approval:_____**Date:**_____
In signing this, I certify that the specifications of this drawing meet my order standards

DIMENSIONS ARE IN INCHES
TOLERANCES:
FRACTIONAL ± 1/32"
TWO PLACE DECIMAL ± .015"
THREE PLACE DECIMAL ± .005"
ALL BENDS ARE ASSUMED
TO BE 90° UNLESS NOTED
OTHERWISE.

	NAME	DATE
DRAWN	WJK	04/11/2006
CHECKED		
MATERIAL		
FINISH		

OVER ALL ASSY
STANDARD C520

Canadian Heating Products

SIZE A | DWG. NO. C520-A01 | REV. 2
SCALE:1:32 | WEIGHT: | SHEET 1 OF 1

REV.	DESCRIPTION	DATE	APPROVED
2	Exhaust collar was 9.9375od	6/28/2006	

PROPRIETARY AND CONFIDENTIAL

Z:\CADD\SEE-FIRE\STANDARD\C520\C520-A01

Wednesday, June 28, 2006 8:46:32 AM

Default

THE INFORMATION CONTAINED IN THIS DRAWING IS THE SOLE PROPERTY OF CANADIAN HEATING PRODUCTS. ANY REPRODUCTION IN PART OR AS A WHOLE WITHOUT THE WRITTEN PERMISSION OF CANADIAN HEATING PRODUCTS IS PROHIBITED.